RYANFIRE PRODUCTS PASSIVE FIRE PROTECTION | HVAC

RYANFIRE
PASSIVE FIRE PROTECTION

New Zealand's leading supplier of passive fire protection solutions

HVAC

PASSIVE FIRE PROTECTION GUIDE

We are impressed with the testing Ryanfire have conducted on their product range, its so much easier dealing direct with the manufacturer and having immediate access to technical information and supporting test data.

Brian Vranjes – **Fire Engineering Limited, Auckland, NZ**

PASSIVE FIRE PROTECTION SOLUTIONS FOR HVAC

Ryanfire have focused on product quality using stainless steel collar casings and graphite rubber linings manufactured in NZ. All our products have been comprehensively tested, and all fire test reports are available on request, or via the FPANZ Passive Fire Product Register NZ.

No matter where you are in the planning or building stage, we can offer you expert guidance to achieve the required rating and protection. HVAC, like electrical and seismic etc, require a range of different sizes, shapes and configurations of exit points in buildings. Our range is comprehensive because our passive fire protection solutions can be used for most substrates for wall and floor separations.

We recognise it can be a very time consuming and costly process if the passive fire solutions are not right the first time. We understand that there is consideration for location of the service penetrations, the type of service, the quantity of the services per penetration and all myriad of size criteria; all aimed at delivering a fire resistance rating that meets the NZ building code.

Whether you are installing a bundle of pair coils though a floor or sealing around a cable through a plasterboard wall, we have the range, the variety and the expertise to ensure you have the right product for the right environment.

If we don't – just ask. We have a design and development team ready to help!

PAUL RYAN
MANAGING DIRECTOR

INSTALLATION INSTRUCTIONS

1. ENSURE THE APERTURE IS CLEAN AND FREE OF DUST AND DEBRIS.
2. SELECT THE CORRET SIZE RYANFIRE SL COLLAR TO FIT AROUND THE HVAC BUNDLE. MAX Ø110MM COLLAR ALLOWED.
3. INVERT AND POSITION THE RYANFIRE SL COLLAR AROUND THE HVAC BUNDLE AND SLIDE IT UP TO THE FACE OF THE PLASTERBOARD SO THAT THE LUGS ARE FLUSH WITH THE SURFACE OF THE PLASTERBOARD.
4. FIX THE COLLAR INTO THE PLASTERBOARD WALL USING 40MM LONG HOLLOW WALL ANCHORS. ENSURE ALL FIXING POINTS ARE USED
5. APPLY RYANFIRE MASTIC TO SMOKE SEAL THE ANNULAR GAP BETWEEN THE COLLAR AND THE WALL.
6. APPLY RYANFIRE HP-X IN THE GAP BETWEEN THE HVAC BUNDLE AND THE COLLAR.
7. REPEAT THE ABOVE TO THE OPPOSITE SIDE OF THE WALL

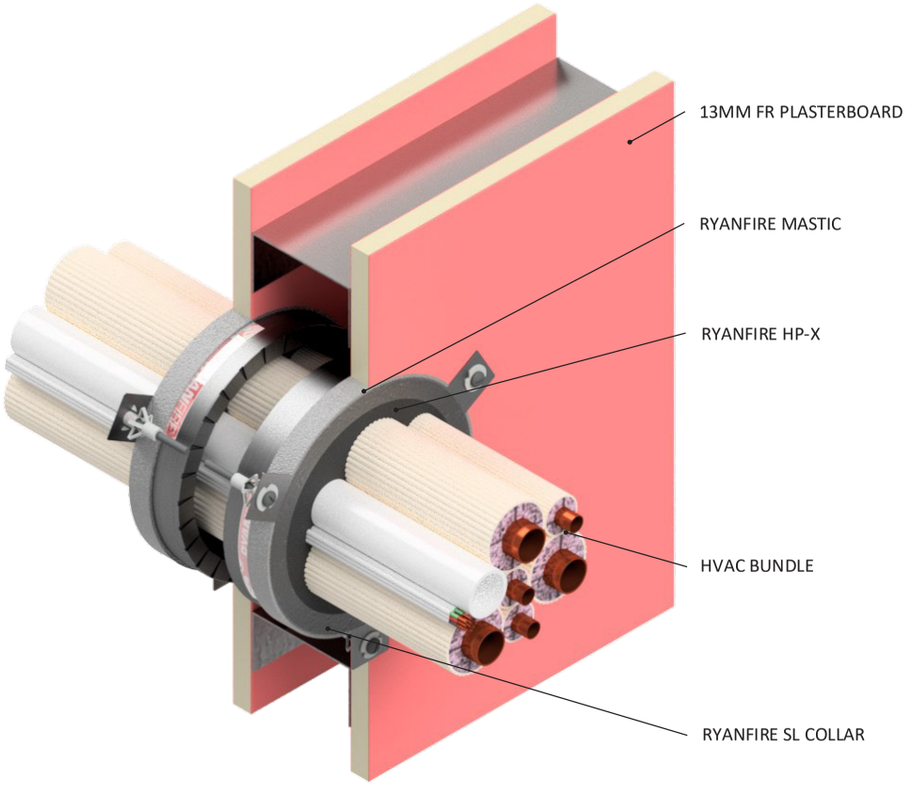

Products:	**RYANFIRE SL COLLAR** **RYANFIRE MASTIC** **RYANFIRE HP-X**
Approvals:	**AS 1530.4/AS 4072.1**
BK:	**55**
Ref:	**FRT 190251**
ID:	**H**
Scenario:	Penetration seal to HVAC bundle (heat pump services)
Services:	Up to: 3 sets pair coil copper pipes 5 TPS Cables Ø25mm uPVC pipe
Construction:	90mm thick FR Plasterboard wall
Fire Integrity:	60 minutes
Fire Insulation:	45 minutes

Web based drawings are for example only. Fire performance of any system is dependant on, but not limited to size of opening, substrate, if penetrations are passing through, type, size and number. Please refer to Ryanfire technical department for detailed and specific fire performance information.

RYANFIRE PASSIVE FIRE PROTECTION

Client

Job Title

Drawing Title

Inverted SL Collar to HVAC bundle 90mm plasterboard wall

Scale	Date
NTS	**July 2024**
Sheet Size **A3**	Drawn By
Drawing Number **V14.6**	Rev **4.0**

Please note:
Ryanfire Products owns and has copyright in these drawings. They are to be used only for the purpose for which they were intended and supplied and are not to be sold, transferred or made available for use by a third party.

Any misuse of these drawings will result in legal proceedings.

All errors and omissions excepted - the Information contained within this drawing is believed to be correct on the date of publication, and is based upon tested and certified solutions. The policy of **RyanFire Products** is one of constant improvement. Installers must therefore ensure that they are following the latest published drawings, test evidence and instructions. Whilst **RyanFire Products** will endeavour to keep its publications up to date, the accuracy of the information contained within this drawing may be affected by pertinent changes in the law or regulatory requirements and alterations or amendments to the specification of **the manufactured** products. Terms and conditions of sale apply.

RYANFIRE Technical Support: info@ryanfire.co.nz- Tel 09 443 0362

INSTALLATION INSTRUCTIONS

1. ENSURE THE APERTURE IS CLEAN AND FREE OF DEBRIS.
2. ENSURE THE SERVICE PENTRATIONS ARE BUNDLED TIGHTLY TOGETHER WHERE THEY PASS THROUGH THE WALL.
3. SELECT THE CORRECT SIZE RYANFIRE SERVICE SLEEVE TO FIT AROUND THE HVAC BUNDLE. INSTALL THE SERVICE SLEEVE INLINE WITH THE WALL.
4. CUT THE RYANBATT 502 TO FIT TIGHTLY BETWEEN THE TIMBER FRAMING AND THE RYANFIRE SERVICE SLEEVE.
5. COAT THE TIMBER FRAMING AND ALL RYANBATT 502 EDGES AND JOINTS WITH RYANFIRE BRUSH GRADE MASTIC.
6. FIT THE RYANBATT 502 INTO THE APERTURE.
7. APPLY RYANFIRE MASTIC TO ALL JUNCTIONS.
8. REPEAT ON THE OPPOSITE SIDE OF THE WALL.
9. APPLY RYANFIRE HP-X INTO ANY GAPS WITHIN THE SLEEVE AND SERVICES TO A MINIMUM DEPTH OF 50MM TO ONE SIDE ONLY.

THIS DETAIL MAY ALSO BE INSTALLED IF YOU ONLY HAVE ACCESS TO ONE SIDE OF THE WALL.

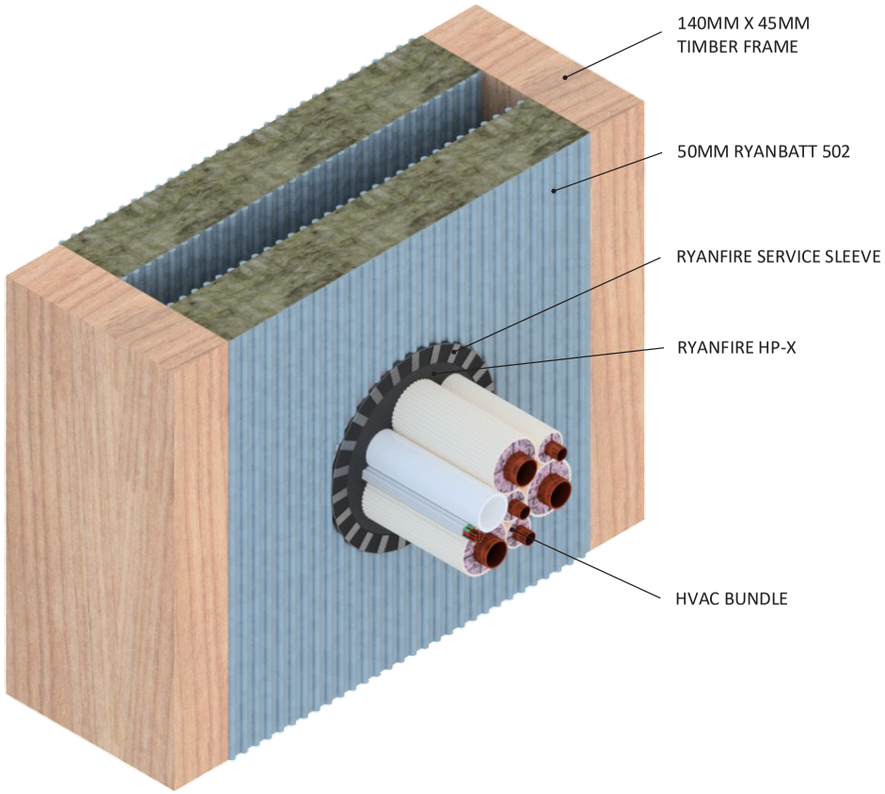

Products:	**RYANBATT 502** **RYANFIRE BRUSH GRADE MASTIC** **RYANFIRE SERVICE SLEEVE** **RYANFIRE HP-X**
Approval:	**AS 1530.4/AS 4072.1**
BK:	**59**
REF:	**PF 19031**
ID:	**D**
Scenario:	HVAC bundle (heat pump services) through Ryanfire Naked Wall System
Services:	Up to: 3 sets pair coil copper pipes 8 TPS cables 2 Ø33mm uPVC pipes
Construction:	140mm x 45mm unlined timber framed wall
Fire Integrity:	90 minutes
Fire Insulation:	30 minutes

Web based drawings are for example only. Fire performance of any system is dependant on, but not limited to size of opening, substrate, if penetrations are passing through, type, size and number. Please refer to

RYANFIRE PASSIVE FIRE PROTECTION

Client

Job Title

Drawing Title

Ryanfire Naked Wall System HVAC bundles

Scale	Date
NTS	**July 2024**
Sheet Size **A3**	Drawn By
Drawing Number **V14.7**	Rev **6.0**

Please note:
Ryanfire Products owns and has copyright in these drawings. They are to be used only for the purpose for which they were intended and supplied and are not to be sold, transferred or made available for use by a third party.

Any misuse of these drawings will result in legal proceedings.

All errors and omissions excepted - the Information contained within this drawing is believed to be correct on the date of publication, and is based upon tested and certified solutions. The policy of **RyanFire Products** is one of constant improvement. Installers must therefore ensure that they are following the latest published drawings, test evidence and instructions. Whilst **RyanFire Products** will endeavour to keep its publications up to date, the accuracy of the information contained within this drawing may be affected by pertinent changes in the law or regulatory requirements and alterations or amendments to the specification of **the manufactured** products. Terms and conditions of sale apply.

RYANFIRE Technical Support: info@ryanfire.co.nz - Tel 09 443 0362

INSTALLATION INSTRUCTIONS

1. ENSURE THE APERTURE IS CLEAN AND FREE OF DUST AND DEBRIS.
2. SELECT THE CORRECT SIZE RYANFIRE SL COLLAR TO FIT AROUND THE HVAC BUNDLE. MAX Ø110MM COLLAR ALLOWED.
3. POSITION THE RYANFIRE SL COLLAR AROUND THE HVAC BUNDLE AND SLIDE IT UP TO THE FACE OF THE PLASTERBOARD WALL.
4. FIX THE COLLAR INTO THE PLASTERBOARD WALL USING 40MM HOLLOW WALL ANCHORS. ENSURE ALL FIXING POINTS ARE USED.
5. APPLY RYANFIRE HP-X INTO THE ANNULAR GAP BETWEEN THE WALL AND THE BUNDLE.
6. APPLY RYANFIRE HP-X INTO THE GAP BETWEEN THE BUNDLE AND THE COLLAR TO THE FULL DEPTH OF THE COLLAR.
7. REPEAT THE ABOVE TO THE OPPOSITE SIDE OF THE WALL

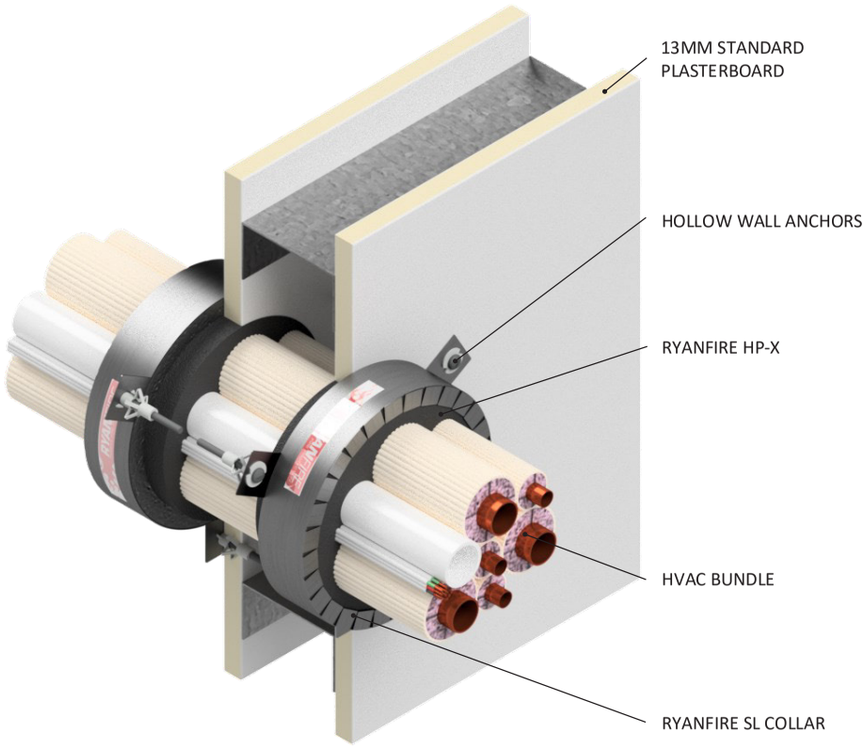

Products:	**RYANFIRE SL COLLAR** **RYANFIRE HP-X**
Approvals:	**AS 1530.4/AS 4072.1**
BK:	**83**
Ref:	**PF 20040**
ID:	**B**
Scenario:	Penetration seal to HVAC bundle (heat pump services)
Services:	Up to: 3 sets pair coil copper pipes 5 TPS cables Ø32mm uPVC pipe
Aperture:	Ø102mm
Construction:	90mm Standard Plasterboard / Masonry wall 13mm Standard Plasterboard
Fire Integrity:	30 minutes
Fire Insulation:	30 minutes

Web based drawings are for example only, fire performance of any system is dependant on, but not limited to size of opening, substrate, if penetrations are passing through, type, size and number. Please refer to Ryanfire technical department for detailed and specific fire performance information.

RYANFIRE PASSIVE FIRE PROTECTION

Client

Job Title

Drawing Title

SL Collar to HVAC bundle
90mm standard plasterboard wall

Scale	Date
NTS	**July 2024**
Sheet Size **A3**	Drawn By
Drawing Number **V14.10**	Rev **4.0**

Please note:
Ryanfire Products owns and has copyright in these drawings. They are to be used only for the purpose for which they were intended and supplied and are not to be sold, transferred or made available for use by a third party.

Any misuse of these drawings will result in legal proceedings.

All errors and omissions excepted - the Information contained within this drawing is believed to be correct on the date of publication, and is based upon tested and certified solutions. The policy of **RyanFire Products** is one of constant improvement. Installers must therefore ensure that they are following the latest published drawings, test evidence and instructions. Whilst **RyanFire Products** will endeavour to keep its publications up to date, the accuracy of the information contained within this drawing may be affected by pertinent changes in the law or regulatory requirements and alterations or amendments to the specification of **the manufactured** products. Terms and conditions of sale apply.

RYANFIRE Technical Support: info@ryanfire.co.nz- Tel 09 443 0362

INSTALLATION INSTRUCTIONS

1. ENSURE THE APERTURE IS CLEAN AND FREE OF DUST AND DEBRIS.
2. CUT THE RYANBATT 502 TO THE REQUIRED SIZE TO FIT TIGHTLY INTO THE FULLY LINED APERTURE.
3. CUT THE RYANBATT 502 TO ALLOW A NOMINAL 20MM ANNULAR GAP AROUND THE HVAC BUNDLE.
4. CUT THE RYANBATT ACROSS THE SHORTEST DIMENSION INCORPORATING THE MIDPOINT OF THE PENETRATION TO ENABLE THE BOARD TO BE FITTED INTO THE APERTURE.
5. APPLY RYANFIRE BRUSH GRADE MASTIC TO ALL THE INTERNAL EDGES OF THE APERTURE AND TO ANY CUT AND EXPOSED EDGES OF THE RYANBATT.
6. INSERT THE RYANBATT 502 INTO THE OPENING TO SIT FLUSH WITH THE SURFACE OF THE WALL.
7. APPLY RYANFIRE HP-X INTO THE ANNULAR GAP (20MM) BETWEEN THE HVAC BUNDLE AND THE RYANBATT 502 TO THE FULL DEPTH OF THE BOARD.
8. APPLY A 5MM BEAD OF RYANFIRE MASTIC TO THE PERIMETER OF THE RYANBATT 502 AND TO ANY JOINTS AND GAPS.
9. REPEAT THIS PROCESS ON THE OPPOSITE SIDE OF THE WALL.

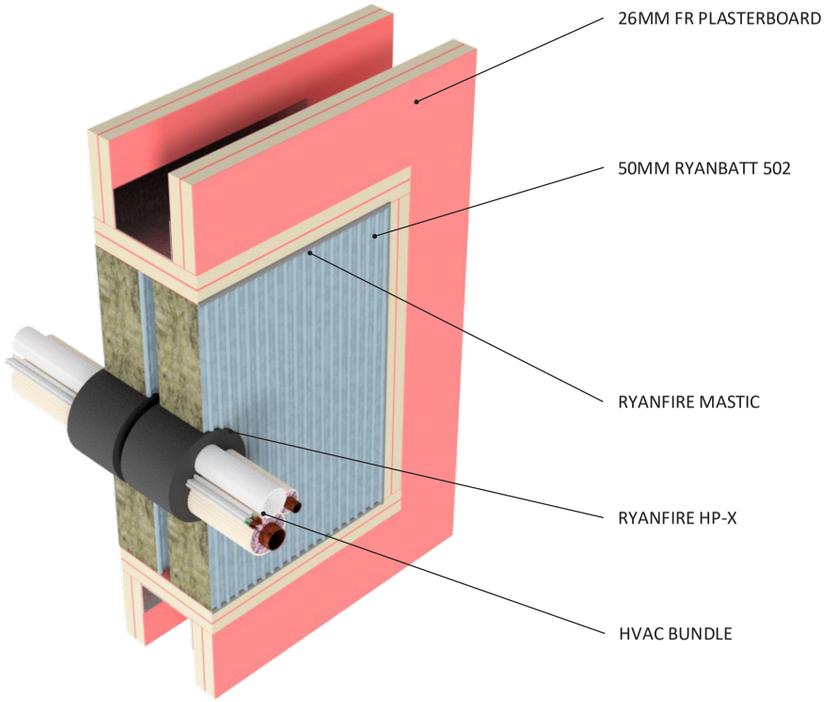

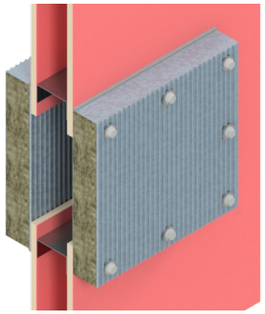

THIS SYSTEM MAY BE INSTALLED USING A PATTRESS FIT CONFIGURATION. PLEASE CONTACT RYANFIRE TECHNICAL SUPPORT FOR MORE INFORMATION.

Please note:
Ryanfire Products owns and has copyright in these drawings. They are to be used only for the purpose for which they were intended and supplied and are not to be sold, transferred or made available for use by a third party.

Any misuse of these drawings will result in legal proceedings.

All errors and omissions excepted - the Information contained within this drawing is believed to be correct on the date of publication, and is based upon tested and certified solutions. The policy of **Ryanfire Products** is one of constant improvement. Installers must therefore ensure that they are following the latest published drawings, test evidence and instructions. Whilst **Ryanfire Products** will endeavour to keep its publications up to date, the accuracy of the information contained within this drawing may be affected by pertinent changes in the law or regulatory requirements and alterations or amendments to the specification of **the manufactured** products. Terms and conditions of sale apply.

RYANFIRE Technical Support: info@ryanfire.co.nz Tel 09 443 0362

Products:	**RYANBATT 502** **RYANFIRE HP-X** **RYANFIRE MASTIC**
Approval:	**AS 1530.4/AS 4072.1**
BK:	**151**
Ref:	**21SFR00020**
ID:	**C**
Scenario:	Penetration seal to HVAC bundle (heat pump services)
Services:	1 set pair coil copper pipes 5 TPS cables Ø20mm uPVC pipe
Annular:	20mm (nominal)
Construction:	116mm FR plasterboard / Masonry wall
Fire Integrity:	120 minutes
Fire Insulation:	120 minutes

Web based drawings are for example only. Fire performance of any system is dependant on, but not limited to, size of opening, substrate, if penetrations are passing through, type, size and number. Please refer to Ryanfire technical department for detailed and specific fire performance information.

RYANFIRE PASSIVE FIRE PROTECTION

Client

Job Title

Drawing Title

Ryanbatt 502 & HP-X to HVAC bundle 116mm plasterboard wall

Scale	Date
NTS	**July 2024**
Sheet Size **A3**	Drawn By
Drawing Number **V14.11**	Rev **2.0**

INSTALLATION INSTRUCTIONS

1. ENSURE THE APERTURE IS CLEAN AND FREE OF DUST AND DEBRIS.
2. CUT THE RYANBATT 502 TO THE REQUIRED SIZE TO FIT TIGHTLY INTO THE FULLY LINED APERTURE.
3. CUT THE RYANBATT 502 TO ALLOW A NOMINAL 20MM ANNULAR GAP AROUND THE HVAC BUNDLE.
4. CUT THE RYANBATT ACROSS THE SHORTEST DIMENSION INCORPORATING THE MIDPOINT OF THE PENETRATION TO ENABLE THE BOARD TO BE FITTED INTO THE APERTURE.
5. APPLY RYANFIRE BRUSH GRADE MASTIC TO ALL THE INTERNAL EDGES OF THE APERTURE AND TO ANY CUT AND EXPOSED EDGES OF THE RYANBATT.
6. INSERT THE RYANBATT 502 INTO THE OPENING TO SIT FLUSH WITH THE SURFACE OF THE WALL.
7. APPLY RYANFIRE HP-X INTO THE ANNULAR GAP (20MM) BETWEEN THE HVAC BUNDLE AND THE RYANBATT 502 TO THE FULL DEPTH OF THE BOARD.
8. WRAP 1 LAYER OF 300MM WIDE RYANFIRE SERVOWRAP TIGHTLY AROUND THE BUNDLE WITH A 100MM OVERLAP. SLIDE THE SERVOWRAP UP AGAINST THE 502 BOARD.
9. SECURE THE SERVOWRAP WITH STEEL CABLE TIES, 50MM FROM EACH END AND 1 NOMINALLY IN THE CENTRE.
10. APPLY A 30MM X 30MM RYANFIRE MASTIC CONE TO THE JOINT BETWEEN THE SERVOWRAP AND THE RYANBATT.
11. APPLY A 5MM BEAD OF RYANFIRE MASTIC TO THE PERIMETER OF THE RYANBATT 502 AND TO ANY JOINTS AND GAPS.
12. REPEAT THIS PROCESS ON THE OPPOSITE SIDE OF THE WALL.

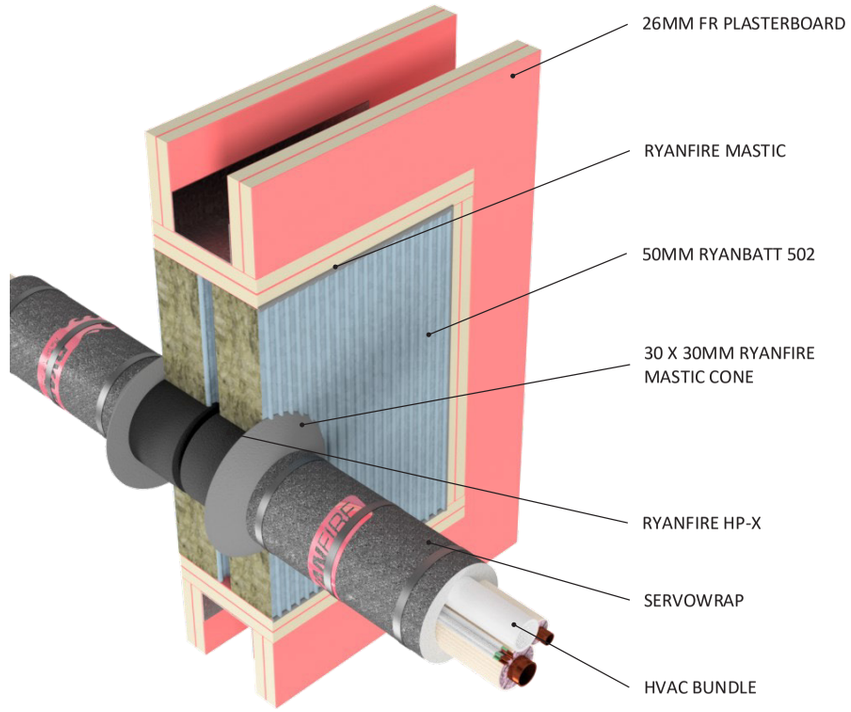

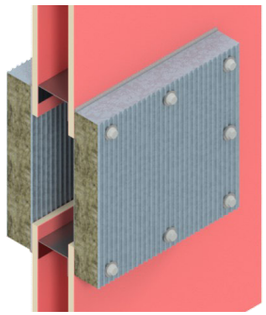

THIS SYSTEM MAY BE INSTALLED USING A PATTRESS FIT CONFIGURATION. PLEASE CONTACT RYANFIRE TECHNICAL SUPPORT FOR MORE INFORMATION.

Products:	**RYANBATT 502** **RYANFIRE HP-X** **RYANFIRE SERVOWRAP** **RYANFIRE MASTIC**
Approval:	**AS 1530.4/AS 4072.1**
BK:	**151**
Ref:	**21SFR00020**
ID:	**B**
Scenario:	Penetration seal to HVAC bundle (heat pump services)
Services:	3 set pair coil copper pipes 3 TPS cables Ø20mm uPVC pipe
Annular:	20mm (nominal)
Construction:	116mm FR plasterboard / Masonry wall
Fire Integrity:	120 minutes
Fire Insulation:	120 minutes

Web based drawings are for example only. Fire performance of any system is dependant on, but not limited to, size of opening, substrate, if penetrations are passing through, type, size and number. Please refer to Ryanfire technical department for detailed and specific fire performance information.

RYANFIRE PASSIVE FIRE PROTECTION

Client

Job Title

Drawing Title

Ryanbatt 502 & Servowrap to HVAC bundle 116mm plasterboard wall

Scale	Date
NTS	**July 2024**
Sheet Size	Drawn By
A3	

Drawing Number	Rev
V14.12	**2.0**

Please note:
Ryanfire Products owns and has copyright in these drawings. They are to be used only for the purpose for which they were intended and supplied and are not to be sold, transferred or made available for use by a third party.

Any misuse of these drawings will result in legal proceedings.

All errors and omissions excepted - the Information contained within this drawing is believed to be correct on the date of publication, and is based upon tested and certified solutions. The policy of **Ryanfire Products** is one of constant improvement. Installers must therefore ensure that they are following the latest published drawings, test evidence and instructions. Whilst **Ryanfire Products** will endeavour to keep its publications up to date, the accuracy of the information contained within this drawing may be affected by pertinent changes in the law or regulatory requirements and alterations or amendments to the specification of **the manufactured** products. Terms and conditions of sale apply.

RYANFIRE Technical Support: info@ryanfire.co.nz Tel 09 443 0362

INSTALLATION INSTRUCTIONS

1. ENSURE THE APERTURE IS CLEAN AND FREE OF DUST AND DEBRIS.
2. SELECT THE CORRECT SIZE RYANFIRE SL COLLAR TO FIT AROUND THE BUNDLE.
3. SECURE THE SL COLLAR AROUND THE PIPE AND SLIDE IT UP UNTIL IT IS FLUSH WITH THE SURFACE OF THE WALL. FIX THE COLLAR INTO PLACE USING 12G X 30MM TEK SCREWS.
4. APPLY RYANFIRE HP-X INTO THE ANNULAR GAP BETWEEN THE BUNDLE AND THE SL COLLAR, TO THE FULL DEPTH OF THE COLLAR.
5. APPLY A NOMINAL 5MM BEAD OF RYANFIRE MASTIC AROUND THE JOINT BETWEEN THE SL COLLAR AND THE KOROK WALL.
6. REPEAT THIS PROCESS ON THE OPPOSITE SIDE OF THE WALL.

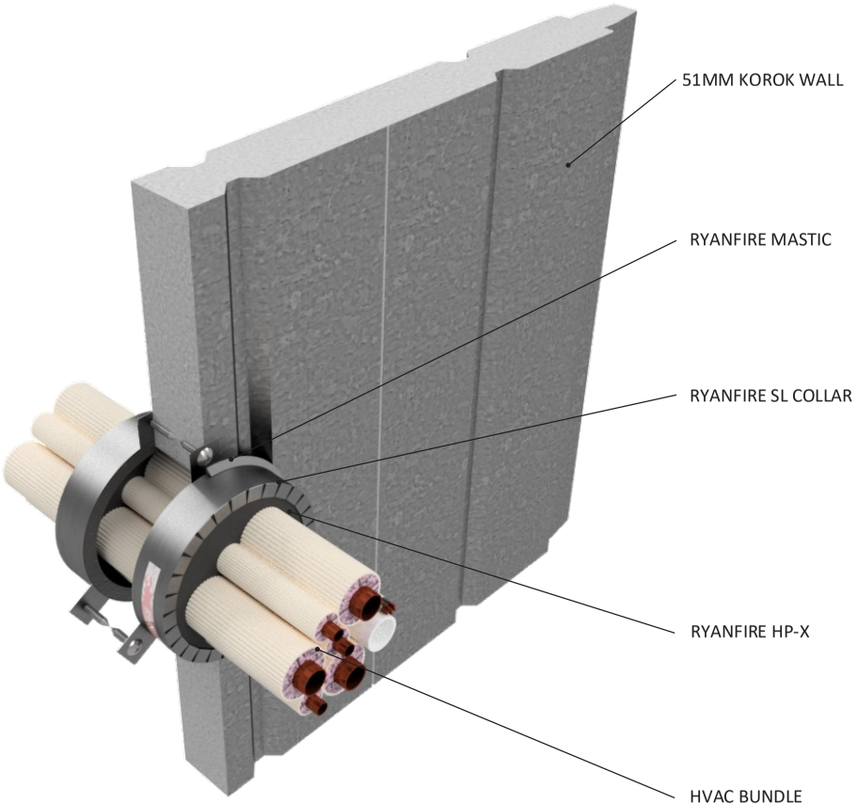

Products:	**RYANFIRE SL COLLAR** **RYANFIRE HP-X** **RYANFIRE MASTIC**
Approvals:	**AS 1530.4/AS 4072.1**
BK:	**165**
Ref:	**22SFR00058**
ID:	**A, B**
Scenario:	Penetration seal to HVAC bundle (heat pump services)
Services:	Up to: 3 sets pair coil copper pipes 5 TPS cables Ø20mm PVC pipe
Construction:	51mm Korok wall
Fire Resistance:	1 set pair coil bundle : -/60/45 3 sets pair coil bundle: -/60/60

Web based drawings are for example only. Fire performance of any system is dependant on, but not limited to size of opening, substrate, if penetrations are passing through, type, size and number. Please refer to Ryanfire technical department for detailed and specific fire performance information.

RYANFIRE PASSIVE FIRE PROTECTION

RYANFIRE Technical Support:
info@ryanfire.co.nz - Tel 09 443 0362

Drawing Title
SL Collar & HP-X to HVAC bundle 51mm Korok wall

Scale	Date
NTS	**July 2024**

Drawing Number	Rev
V14.13	**2.0**

All errors and omissions excepted. The information contained within this drawing is believed to be correct on the date of publication, and is based upon tested and certified solutions. The policy of **Ryanfire Products** is one of constant improvement. Installers must ensure that they are following the latest published drawings, test evidence and instructions. Whilst **Ryanfire Products** will endeavour to keep its publications up to date, the accuracy of the information contained within this drawing may be affected by pertinent changes in the law or regulatory requirements and alterations or amendments to the specification of **the manufactured** products. Terms and conditions of sale apply.

Ryanfire Products owns and has copyright to these drawings. They are to be used only for the purpose for which they were intended and supplied and are not to be sold, transferred or made available for use by a third party. Any misuse of these drawings will result in legal proceedings.

INSTALLATION INSTRUCTIONS

1. ENSURE THE APERTURE IS CLEAN AND FREE OF DUST AND DEBRIS.
2. CUT A PLASTERBOARD PATCH TO FIT ONTO THE WALL. THE PATCH SHOULD EXTEND A MINIMUM OF 50MM IN ALL DIRECTIONS AROUND THE APERTURE.
3. APPLY A BEAD OF RYANFIRE MASTIC ON THE MATING FACE OF THE PATCH AND FIX IT TO THE WALL USING 6G X 46MM (MINIMUM) PLASTERBOARD SCREWS, 25MM FROM THE EDGES AND AT CENTRES NOT EXCEED 200MM.
4. APPLY RYANFIRE MASTIC TO SEAL THE PERIMETER JOINT BETWEEN THE WALL AND THE PATCH.
5. INSERT PEF BACKING INTO THE ANNULAR GAP BETWEEN THE HVAC BUNDLE AND THE WALL.
6. APPLY RYANFIRE HP-X INTO THE ANNULAR GAP BETWEEN THE HVAC BUNDLE AND THE WALL TO THE FULL DEPTH OF THE WALL + PATCH (26MM).
7. REPEAT THIS PROCESS ON THE OPPOSITE SIDE OF THE WALL.
8. REMOVE ANY EXCESS SEALANT WITH A DAMP CLOTH.

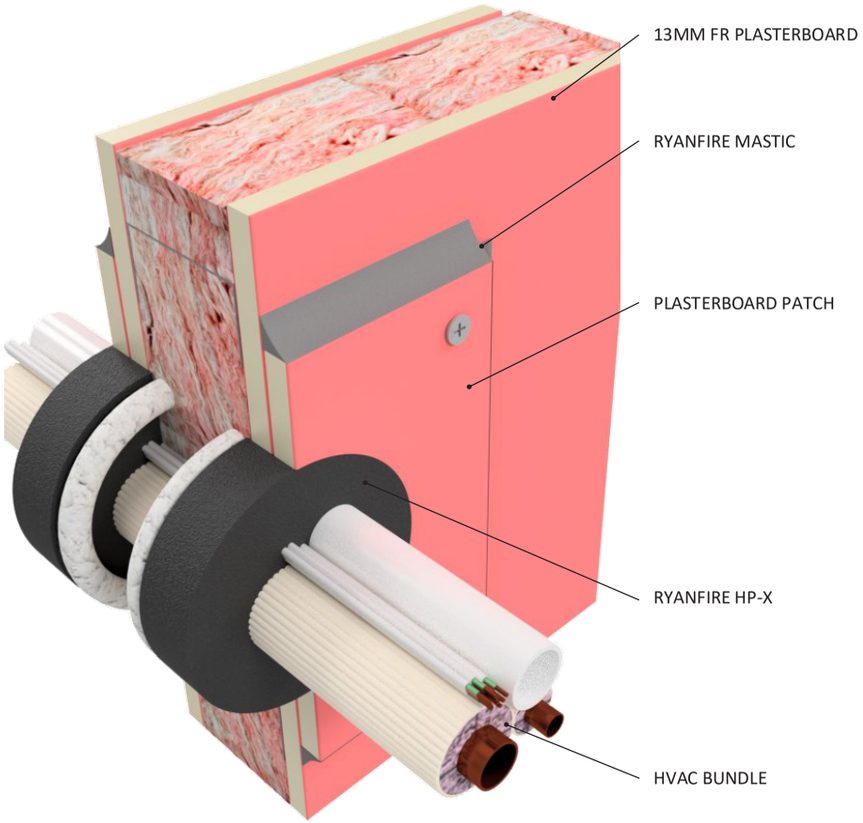

Products:	**RYANFIRE MASTIC** **RYANFIRE HP-X**
Approvals:	**AS 1530.4/AS 4072.1**
BK:	**158**
Ref:	**22SFR00053**
ID:	**G**
Scenario:	Penetration seal to HVAC bundle (heat pump services)
Services:	1 set pair coil copper pipes 5 TPS cables Ø20mm PVC pipe
Construction:	90mm FR plasterboard wall + plasterboard patch
Aperture:	Max Ø100mm
Annular:	10 - 20mm
Fire Integrity:	60 minutes
Fire Insulation:	30 minutes

Web based drawings are for example only. Fire performance of any system is dependant on, but not limited to size of opening, substrate, if penetrations are passing through, type, size and number. Please refer to Ryanfire technical department for detailed and specific fire performance information.

RYANFIRE PASSIVE FIRE PROTECTION

RYANFIRE Technical Support:
info@ryanfire.co.nz - Tel 09 443 0362

Drawing Title

Ryanfire HP-X + patch to HVAC bundle 90mm plasterboard wall

Scale	Date
NTS	**July 2024**

Drawing Number	Rev
V14.14	**3.0**

All errors and omissions excepted. The information contained within this drawing is believed to be correct on the date of publication, and is based upon tested and certified solutions. The policy of **Ryanfire Products** is one of constant improvement. Installers must ensure that they are following the latest published drawings, test evidence and instructions. Whilst **Ryanfire Products** will endeavour to keep its publications up to date, the accuracy of the information contained within this drawing may be affected by pertinent changes in the law or regulatory requirements and alterations or amendments to the specification of **the manufactured** products. Terms and conditions of sale apply.

Ryanfire Products owns and has copyright to these drawings. They are to be used only for the purpose for which they were intended and supplied and are not to be sold, transferred or made available for use by a third party. Any misuse of these drawings will result in legal proceedings.

INSTALLATION INSTRUCTIONS

1. ENSURE THE APERTURE IS CLEAN AND FREE OF DUST AND DEBRIS.
2. SELECT THE RYANFIRE SL82 COLLAR TO FIT AROUND THE HVAC BUNDLE.
3. INVERT AND POSITION THE RYANFIRE SL COLLAR AROUND THE HVAC BUNDLE AND SLIDE IT UP TO THE FACE OF THE WALL SO THAT THE FIXING TABS ARE FLUSH WITH THE SURFACE OF THE PLASTERBOARD.
4. FIX THE COLLAR THROUGH THE TABS INTO THE WALL USING HOLLOW WALL ANCHORS. ENSURE ALL FIXING TABS ARE USED.
5. APPLY RYANFIRE MASTIC INTO THE ANNULAR GAP BETWEEN THE COLLAR AND THE PLASTERBOARD WALL TO THE FULL DEPTH OF THE PLASTERBOARD.
6. APPLY RYANFIRE HP-X INTO THE ANNULAR GAP BETWEEN THE HVAC BUNDLE AND THE COLLAR TO THE FULL DEPTH OF THE COLLAR.
7. REMOVE ANY EXCESS SEALANT WITH A DAMP CLOTH.

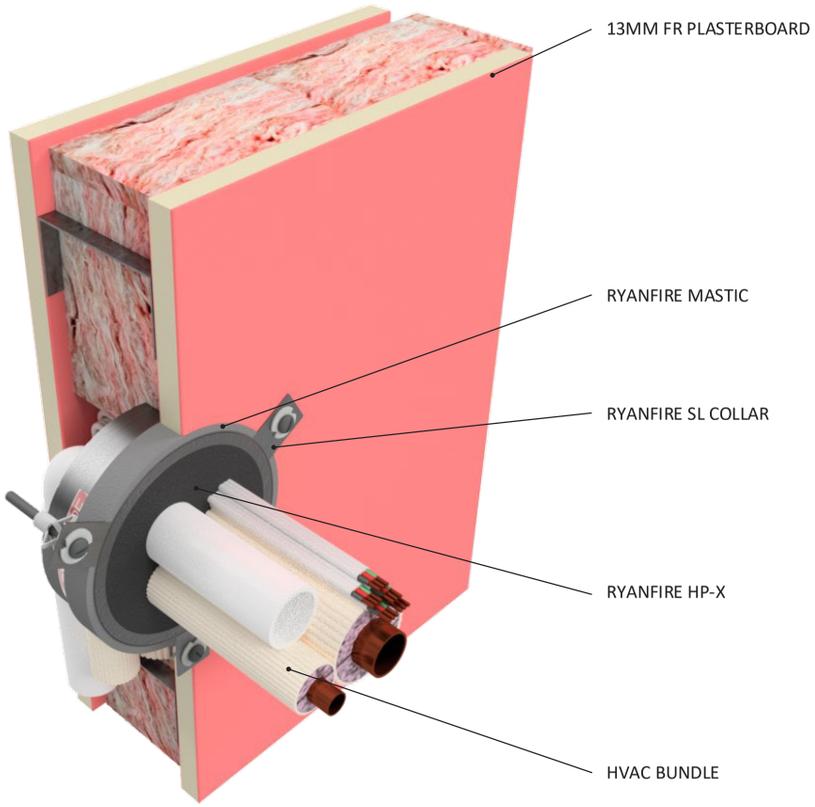

Products:	**RYANFIRE SL COLLAR** **RYANFIRE MASTIC** **RYANFIRE HP-X**
Approvals:	**AS 1530.4/AS 4072.1**
BK:	**158**
Ref:	**22SFR00053**
ID:	**B**
Scenario:	One way penetration seal to HVAC bundle (heat pump services)
Services:	1 set pair coil copper pipes 5 TPS cables Ø20mm PVC pipe
Construction:	90mm FR plasterboard wall
Fire Integrity:	60 minutes
Fire Insulation:	45 minutes

Web based drawings are for example only. Fire performance of any system is dependant on, but not limited to size of opening, substrate, if penetrations are passing through, type, size and number. Please refer to Ryanfire technical department for detailed and specific fire performance information.

RYANFIRE PASSIVE FIRE PROTECTION

RYANFIRE Technical Support:
info@ryanfire.co.nz - Tel 09 443 0362

Drawing Title

Ryanfire SL Collar & HP-X to HVAC bundle 90mm plasterboard wall

Scale	Date
NTS	**July 2024**

Drawing Number	Rev
V14.15	**2.0**

All errors and omissions excepted. The information contained within this drawing is believed to be correct on the date of publication, and is based upon tested and certified solutions. The policy of **Ryanfire Products** is one of constant improvement. Installers must ensure that they are following the latest published drawings, test evidence and instructions. Whilst **Ryanfire Products** will endeavour to keep its publications up to date, the accuracy of the information contained within this drawing may be affected by pertinent changes in the law or regulatory requirements and alterations or amendments to the specification of **the manufactured** products. Terms and conditions of sale apply.

Ryanfire Products owns and has copyright to these drawings. They are to be used only for the purpose for which they were intended and supplied and are not to be sold, transferred or made available for use by a third party. Any misuse of these drawings will result in legal proceedings.

INSTALLATION INSTRUCTIONS

1. ENSURE THE APERTURE IS CLEAN AND FREE OF DUST AND DEBRIS.
2. CUT A PLASTERBOARD PATCH TO FIT ONTO THE WALL. THE PATCH SHOULD OVERLAP MINIMUM 100MM FROM THE EDGE OF THE APERTURE IN ALL DIRECTIONS. THE PATCH MUST BE SECURED INTO THE WALL FRAMING.
3. CUT THE PATCH IN TWO PIECES, ACROSS THE SHORTEST DIMENSION, THROUGH THE MIDPOINT OF THE PENETRATION TO ALLOW IT TO BE FIXED INTO PLACE.
4. APPLY A BEAD OF RYANFIRE MASTIC ON THE MATING FACE OF THE PATCH AND FIX IT TO THE WALL USING 63MM (MINIMUM) PLASTERBOARD SCREWS, 25MM FROM EACH EDGE. ENSURE THE PATCH IS FIXED INTO THE FRAMING.
5. APPLY RYANFIRE MASTIC TO SEAL THE JOINT BETWEEN THE TWO PATCH PIECES, AND TO THE PERIMETER JOINT BETWEEN THE WALL AND THE PATCH.
6. POSITION THE SL COLLAR AROUND THE HVAC BUNDLE AND SLIDE IT UP TO THE SURFACE OF THE PATCH.
7. FIX THE COLLAR TO THE PATCH WITH 63MM PLASTERBOARD SCREWS. ENSURE ALL FIXING POINTS ARE USED.
8. APPLY RYANFIRE HP-X INTO THE ANNULAR GAP BETWEEN THE HVAC BUNDLE AND THE COLLAR TO THE FULL DEPTH OF THE COLLAR.
9. REPEAT THIS PROCESS ON THE OPPOSITE SIDE OF THE WALL.
10. REMOVE ANY EXCESS SEALANT WITH A DAMP CLOTH.

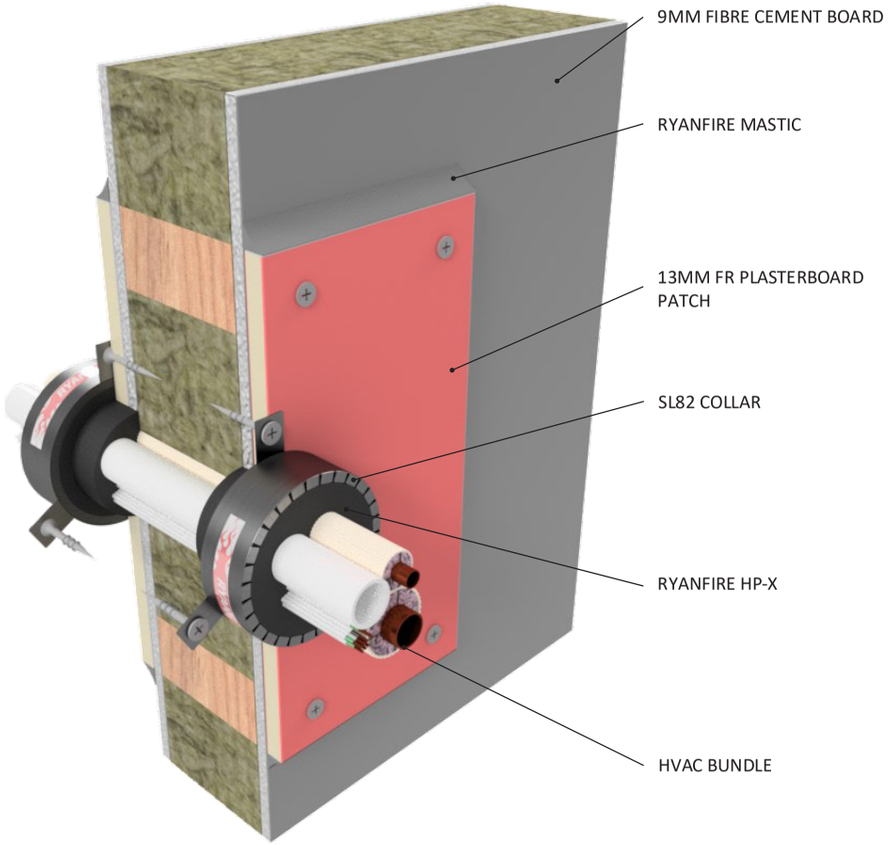

Products:	**RYANFIRE SL COLLAR** **RYANFIRE HP-X** **RYANFIRE MASTIC**
Approvals:	**AS 1530.4/AS 4072.1**
BK:	**177**
Ref:	**22SFR00068**
ID:	**A**
Scenario:	Penetration seal to HVAC bundle (heat pump services)
Services:	1 set pair coil copper pipes 5 TPS cables Ø20mm PVC pipe
Construction:	108mm fibre cement board wall + 13mm FR plasterboard patch
Aperture:	Max Ø82mm
Annular:	5 - 15mm
Fire Integrity:	60 minutes
Fire Insulation:	60 minutes

Web based drawings are for example only. Fire performance of any system is dependant on, but not limited to size of opening, substrate, if penetrations are passing through, type, size and number. Please refer to Ryanfire technical department for detailed and specific fire performance information.

RYANFIRE PASSIVE FIRE PROTECTION

RYANFIRE Technical Support:
info@ryanfire.co.nz - Tel 09 443 0362

Drawing Title

SL Collar, HP-X + patch to HVAC bundle 108mm fibre cement board wall

Scale	Date
NTS	**July 2024**

Drawing Number	Rev
V14.16	**2.0**

All errors and omissions excepted. The information contained within this drawing is believed to be correct on the date of publication, and is based upon tested and certified solutions. The policy of **Ryanfire Products** is one of constant improvement. Installers must ensure that they are following the latest published drawings, test evidence and instructions. Whilst **Ryanfire Products** will endeavour to keep its publications up to date, the accuracy of the information contained within this drawing may be affected by pertinent changes in the law or regulatory requirements and alterations or amendments to the specification of **the manufactured** products. Terms and conditions of sale apply.

Ryanfire Products owns and has copyright to these drawings. They are to be used only for the purpose for which they were intended and supplied and are not to be sold, transferred or made available for use by a third party. Any misuse of these drawings will result in legal proceedings.

INSTALLATION INSTRUCTIONS

1. ENSURE THE APERTURE IS CLEAN AND FREE OF DUST AND DEBRIS.
2. INSERT A LAYER OF 50MM THICK RYANROCK INTO THE ANNULAR GAP BETWEEN THE HVAC BUNDLE AND THE WALL, RECESSED 25MM FROM THE SURFACE.
3. APPLY HP-X INTO THE ANNULAR GAP BETWEEN THE HVAC BUNDLE AND THE WALL TO A DEPTH OF 25MM, FINISHING FLUSH TO THE SURFACE OF THE WALL.
4. WRAP 1 LAYER OF 300MM WIDE SERVOWRAP AROUND THE BUNDLE WITH A MINIMUM 100 MM OVERLAP. SLIDE THE SERVOWRAP UP AGAINST THE SURFACE OF THE WALL.
5. SECURE THE SERVOWRAP AROUND THE BUNDLE USING STEEL CABLE TIES 50MM FROM EACH EDGE AND 1 NOMINALLY IN THE CENTRE.
6. SEAL ANY EXPOSED EDGES OF THE SERVOWRAP WITH FOIL TAPE.
7. APPLY A 20MM X 20MM CONE OF RYANFIRE MASTIC TO THE JOINT BETWEEN THE SERVOWRAP AND THE CONCRETE WALL.
8. REPEAT THIS PROCESS ON THE OPPOSITE SIDE OF THE WALL.
9. REMOVE ANY EXCESS SEALANT WITH A DAMP CLOTH.

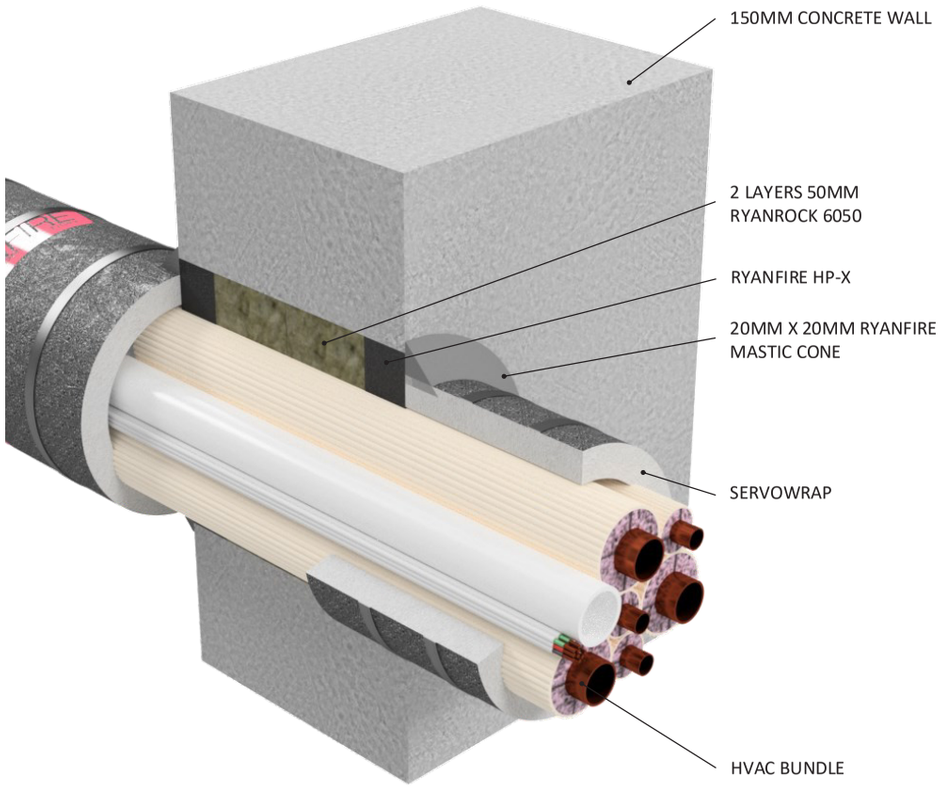

Products:	**RYANROCK 6050** **RYANFIRE HP-X** **RYANFIRE SERVOWRAP** **RYANFIRE MASTIC**
Approvals:	**AS 1530.4/AS 4072.1**
BK:	**200**
Ref:	**22SFR00009**
ID:	**C**
Scenario:	Penetration seal to HVAC bundle (heat pump services)
Services:	3 sets pair coil copper pipes 5 TPS cables Ø20mm PVC pipe
Construction:	150mm concrete wall
Aperture:	Max Ø133mm
Annular:	20mm - 35mm
Fire Integrity:	180 minutes
Fire Insulation:	180 minutes

Web based drawings are for example only. Fire performance of any system is dependant on, but not limited to size of opening, substrate, if penetrations are passing through, type, size and number. Please refer to Ryanfire technical department for detailed and specific fire performance information.

RYANFIRE PASSIVE FIRE PROTECTION

RYANFIRE Technical Support:
info@ryanfire.co.nz - Tel 09 443 0362

Drawing Title

HP-X + Servowrap to HVAC bundle 150mm concrete wall

Scale	Date
NTS	**July 2024**

Drawing Number	Rev
V14.17	**2.0**

All errors and omissions excepted. The information contained within this drawing is believed to be correct on the date of publication, and is based upon tested and certified solutions. The policy of **Ryanfire Products** is one of constant improvement. Installers must ensure that they are following the latest published drawings, test evidence and instructions. Whilst **Ryanfire Products** will endeavour to keep its publications up to date, the accuracy of the information contained within this drawing may be affected by pertinent changes in the law or regulatory requirements and alterations or amendments to the specification of **the manufactured** products. Terms and conditions of sale apply.

Ryanfire Products owns and has copyright to these drawings. They are to be used only for the purpose for which they were intended and supplied and are not to be sold, transferred or made available for use by a third party. Any misuse of these drawings will result in legal proceedings.

INSTALLATION INSTRUCTIONS

1. ENSURE THE APERTURE IS CLEAN AND FREE OF DEBRIS.
2. SELECT THE CORRECT SIZE RYANFIRE SERVICE SLEEVE, AND POSITION IT AROUND THE SERVICE BUNDLE INLINE WITH PROPOSED RYANBATT 802 (WITHIN THE PLANE OF THE WALL).
3. WRAP THE SERVICE SLEEVE WITH 300MM WIDE SERVOWRAP, WITH A 100MM OVERLAP. SECURE THE SERVOWRAP IN PLACE WITH STEEL CABLE TIES, 50MM FROM EACH END AND 1 NOMINALLY IN THE CENTRE.
4. SEAL ANY EXPOSED EDGES OF THE SERVOWRAP WITH FOIL TAPE.
5. CUT THE RYANBATT 802 TO FIT TIGHTLY BETWEEN THE TIMBER FRAMING AND THE WRAPPED BUNDLE. JOINS IN THE 802 SHOULD UTILISE A 40MM X 40MM SHIPLAP JOINT.
6. COAT ALL INTERNAL FRAMING WITH RYANFIRE BRUSH GRADE MASTIC.
7. COAT ALL 802 EDGES AND JOINTS WITH RYANFIRE BRUSH GRADE OR RYANFIRE MASTIC.
8. FIT THE RYANBATT 802 INTO THE VOID.
9. APPLY A NOMINAL 5MM BEAD OF RYANFIRE MASTIC AROUND THE JUNCTION BETWEEN THE RYANBATT AND THE WRAPPED SERVICES.
10. APPLY RYANFIRE MASTIC TO ALL OTHER JUNCTIONS.

THIS SYSTEM MAY BE INSTALLED WHERE THERE IS ACCESS TO ONLY ONE SIDE OF THE WALL.

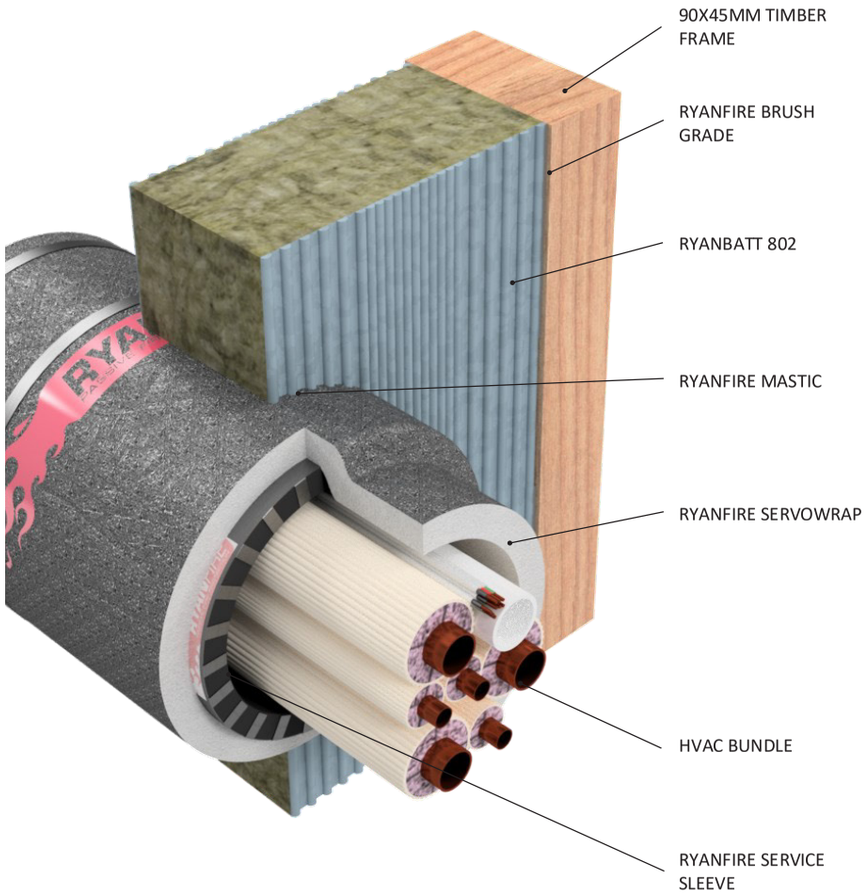

40MM X 40MM SHIPLAP JOINT

Products:	**RYANBATT 802** **RYANFIRE SERVICE SLEEVE** **RYANFIRE SERVOWRAP** **RYANFIRE BRUSH GRADE MASTIC** **RYANFIRE MASTIC**
Approval:	**AS 1530.4/AS 4072.1**
BK:	**229**
REF:	**23SFR00054**
ID:	**A, B**
Scenario:	HVAC bundle (heat pump services) through Ryanfire 802 Naked Wall System
Services:	Up to 3 sets pair coil copper pipes 5 TPS cables Ø20mm PVC pipe
Construction:	90mm x 45mm timber framed wall
Fire Resistance:	1 set pair coil bundle: -/60/60 3 sets pair col bundle: -/60/-

Web based drawings are for example only. Fire performance of any system is dependant on, but not limited to size of opening, substrate, if penetrations are passing through, type, size and number. Please refer to Ryanfire technical department for detailed and specific fire performance information.

RYANFIRE PASSIVE FIRE PROTECTION

RYANFIRE Technical Support:
info@ryanfire.co.nz - Tel 09 443 0362

Drawing Title

Ryanfire 90mm Naked Wall System HVAC bundle

Scale	Date
NTS	**July 2024**

Drawing Number	Rev
V14.18	**2.0**

All errors and omissions excepted. The information contained within this drawing is believed to be correct on the date of publication, and is based upon tested and certified solutions. The policy of **Ryanfire Products** is one of constant improvement. Installers must ensure that they are following the latest published drawings, test evidence and instructions. Whilst **Ryanfire Products** will endeavour to keep its publications up to date, the accuracy of the information contained within this drawing may be affected by pertinent changes in the law or regulatory requirements and alterations or amendments to the specification of **the manufactured** products. Terms and conditions of sale apply.

Ryanfire Products owns and has copyright to these drawings. They are to be used only for the purpose for which they were intended and supplied and are not to be sold, transferred or made available for use by a third party. Any misuse of these drawings will result in legal proceedings.

INSTALLATION INSTRUCTIONS

1. ENSURE THE APERTURE IS CLEAN AND FREE OF DUST AND DEBRIS.
2. APPLY RYANFIRE MASTIC INTO THE ANNULAR GAP BETWEEN THE SERVICE BUNDLE AND THE PLASTERBOARD WALL.
3. POSITION THE FS COLLAR AROUND THE HVAC BUNDLE AND SLIDE IT UP TO THE SURFACE OF THE WALL
4. FIX THE COLLAR TO THE WALL WITH 8G X 50MM PLASTERBOARD SCREWS. ENSURE ALL FIXING POINTS ARE USED.
5. APPLY RYANFIRE HP-X INTO THE ANNULAR GAP BETWEEN THE HVAC BUNDLE AND THE COLLAR TO THE FULL DEPTH OF THE COLLAR.
6. WRAP ONE LAYER OF 300MM WIDE SERVOWRAP AROUND THE BUNDLE ENSURING A 100MM OVERLAP ON THE LONG EDGE. SLIDE THE SERVOWRAP ALONG THE HVAC BUNDLE UNTIL IT IS UP AGAINST THE FS COLLAR.
7. SECURE THE SERVOWRAP IN PLACE USING STEEL CABLE TIES, 50MM FROM EACH END AND ONE NOMINALLY IN THE CENTRE.
8. APPLY FOIL TAPE TO ANY EXPOSED EDGES OF THE SERVOWRAP.
9. REPEAT THIS PROCESS ON THE OPPOSITE SIDE OF THE WALL.
10. REMOVE ANY EXCESS SEALANT WITH A DAMP CLOTH.

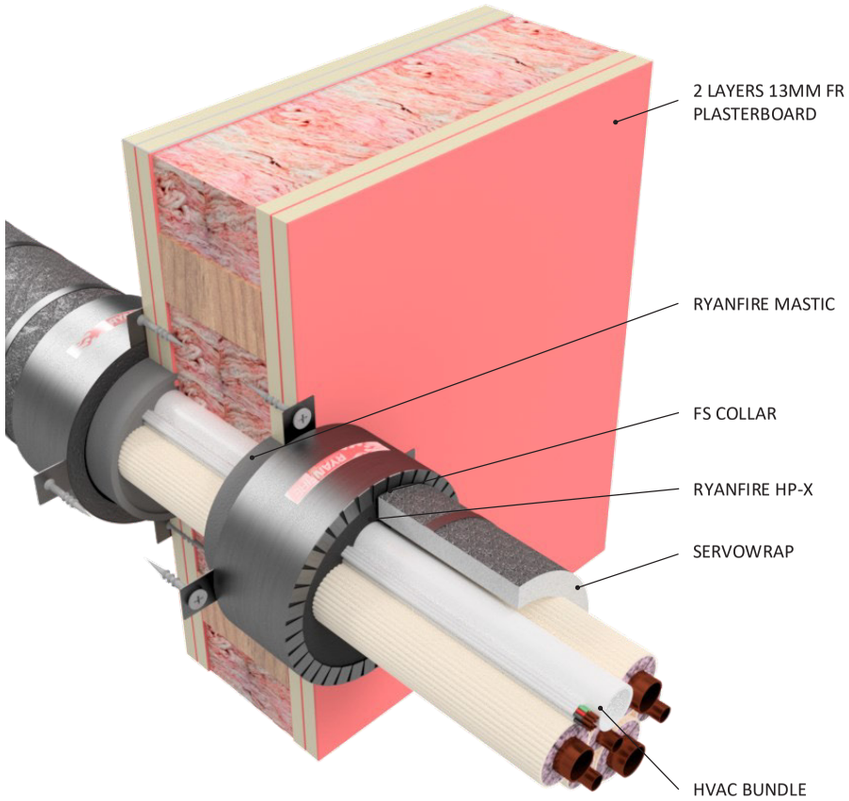

Products:	**RYANFIRE FS COLLAR** **RYANFIRE HP-X** **RYANFIRE MASTIC** **RYANFIRE SERVOWRAP**
Approvals:	**AS 1530.4/AS 4072.1**
BK:	**253**
Ref:	**22SFR00083**
ID:	**F**
Scenario:	Penetration seal to HVAC bundle (heat pump services)
Services:	Up to 3 sets pair coil copper pipes 5 TPS cables Ø20mm PVC pipe
Construction:	142mm FR plasterboard / Masonry Wall
Aperture:	Max Ø116mm
Annular:	10 - 25mm
Fire Integrity:	120 minutes
Fire Insulation:	120 minutes

Web based drawings are for example only. Fire performance of any system is dependant on, but not limited to size of opening, substrate, if penetrations are passing through, type, size and number. Please refer to Ryanfire technical department for detailed and specific fire performance information.

RYANFIRE PASSIVE FIRE PROTECTION

RYANFIRE Technical Support:
info@ryanfire.co.nz - Tel 09 443 0362

Drawing Title

FS Collar, HP-X & Servowrap to HVAC bundle 142mm plasterboard wall

Scale	Date
NTS	**July 2024**

Drawing Number	Rev
V14.19	**3.0**

All errors and omissions excepted. The information contained within this drawing is believed to be correct on the date of publication, and is based upon tested and certified solutions. The policy of **Ryanfire Products** is one of constant improvement. Installers must ensure that they are following the latest published drawings, test evidence and instructions. Whilst **Ryanfire Products** will endeavour to keep its publications up to date, the accuracy of the information contained within this drawing may be affected by pertinent changes in the law or regulatory requirements and alterations or amendments to the specification of **the manufactured** products. Terms and conditions of sale apply.

Ryanfire Products owns and has copyright to these drawings. They are to be used only for the purpose for which they were intended and supplied and are not to be sold, transferred or made available for use by a third party. Any misuse of these drawings will result in legal proceedings.

INSTALLATION INSTRUCTIONS

1. ENSURE THE APERTURE IS CLEAN AND FREE OF DUST AND DEBRIS.
2. APPLY RYANFIRE MASTIC INTO THE ANNULAR GAP BETWEEN THE PAIR COIL BUNDLE AND THE WALL.
3. SELECT THE CORRECT SIZE RYANFIRE SL COLLAR TO FIT AROUND THE INSULATED HVAC PAIR COIL.
4. POSITION THE RYANFIRE SL COLLAR AROUND THE BUNDLE AND SLIDE IT UP TO THE FACE OF THE PLASTERBOARD SO THAT THE LUGS ARE FLUSH WITH THE SURFACE OF THE PLASTERBOARD.
5. FIX THE COLLAR INTO THE PLASTERBOARD WALL USING HOLLOW WALL ANCHORS. ENSURE ALL FIXING POINTS ARE USED
6. APPLY RYANFIRE HP-X INTO THE GAP BETWEEN THE HVAC BUNDLE AND THE COLLAR, TO THE FULL DEPTH OF THE COLLAR.
7. REPEAT THIS PROCESS TO THE OPPOSITE SIDE OF THE WALL.
8. CLEAN UP ANY EXCESS SEALANT WITH A DAMP CLOTH.

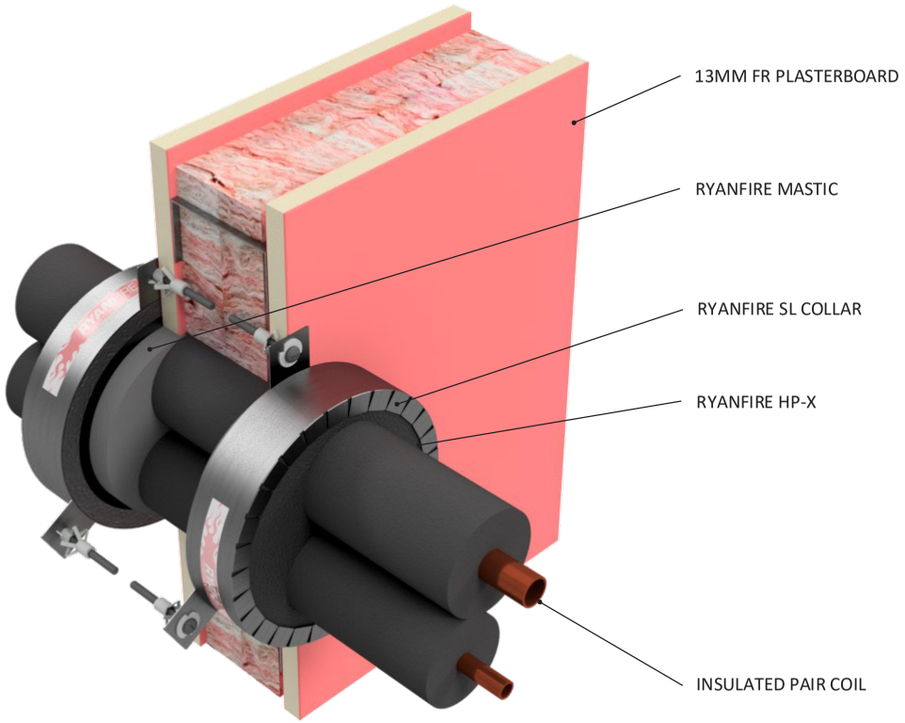

Products:	**RYANFIRE SL COLLAR** **RYANFIRE MASTIC** **RYANFIRE HP-X**
Approvals:	**AS 1530.4/AS 4072.1**
BK:	**257**
Ref:	**23SFR00084**
ID:	**E**
Scenario:	Penetration seal to fire rated pair coil (heat pump services)
Services:	1 set nitrile rubber insulated pair coil
Construction:	90mm thick FR Plasterboard wall
Fire Integrity:	60 minutes
Fire Insulation:	60 minutes

Web based drawings are for example only. Fire performance of any system is dependant on, but not limited to size of opening, substrate, if penetrations are passing through, type, size and number. Please refer to Ryanfire technical department for detailed and specific fire performance information.

RYANFIRE PASSIVE FIRE PROTECTION

RYANFIRE Technical Support:
info@ryanfire.co.nz - Tel 09 443 0362

Drawing Title

SL Collar & HP-X to fire rated pair coil 90mm plasterboard wall

Scale	Date
NTS	**July 2024**

Drawing Number	Rev
V14.20	**2.0**

All errors and omissions excepted. The information contained within this drawing is believed to be correct on the date of publication, and is based upon tested and certified solutions. The policy of **Ryanfire Products** is one of constant improvement. Installers must ensure that they are following the latest published drawings, test evidence and instructions. Whilst **Ryanfire Products** will endeavour to keep its publications up to date, the accuracy of the information contained within this drawing may be affected by pertinent changes in the law or regulatory requirements and alterations or amendments to the specification of **the manufactured** products. Terms and conditions of sale apply.

Ryanfire Products owns and has copyright to these drawings. They are to be used only for the purpose for which they were intended and supplied and are not to be sold, transferred or made available for use by a third party. Any misuse of these drawings will result in legal proceedings.

INSTALLATION INSTRUCTIONS

1. ENSURE THE APERTURE IS CLEAN AND FREE OF DUST AND DEBRIS.
2. APPLY RYANFIRE MASTIC INTO THE ANNULAR GAP BETWEEN THE HVAC BUNDLE AND THE AFS LOGICWALL.
3. SELECT THE CORRECT SIZE RYANFIRE SL COLLAR TO FIT AROUND THE SERVICES.
4. SECURE THE SL COLLAR AROUND THE BUNDLE AND SLIDE IT UP UNTIL IT IS UP AGAINST THE SURFACE OF THE WALL. FIX THE COLLAR INTO PLACE USING 6.5 X 32MM CONCRETE ANCHORS. ENSURE ALL FIXING TABS ARE USED.
5. APPLY RYANFIRE HP-X INTO THE ANNULAR GAP BETWEEN THE BUNDLE AND THE COLLAR, TO THE FULL DEPTH OF THE COLLAR.
6. REPEAT THIS PROCESS ON THE OPPOSITE SIDE OF THE WALL.

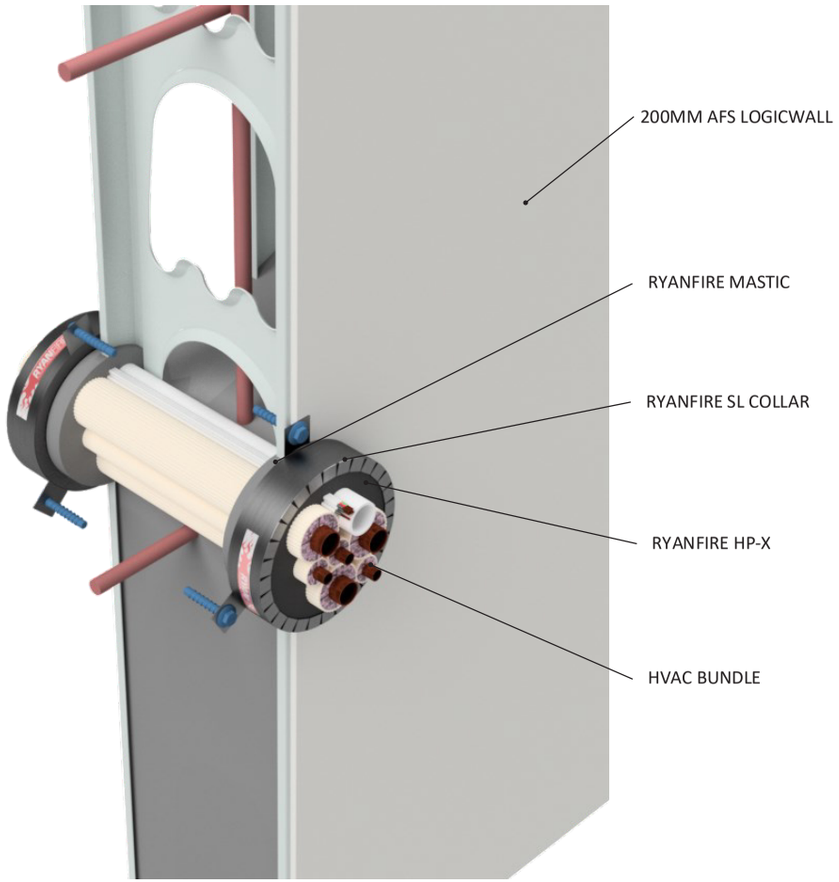

Products:	**RYANFIRE SL COLLAR** **RYANFIRE MASTIC** **RYANFIRE HP-X**
Approvals:	**AS 1530.4/AS 4072.1**
BK:	**280**
Ref:	**23SFR00089**
ID:	**C**
Scenario:	Penetration seal to HVAC bundle (heat pump services)
Services:	Up to 3 sets pair coil copper pipes 5 TPS cables Ø20mm PVC pipe
Construction:	200mm AFS Logicwall
Fire Integrity:	120 minutes
Fire Insulation	120 minutes

Web based drawings are for example only. Fire performance of any system is dependant on, but not limited to size of opening, substrate, if penetrations are passing through, type, size and number. Please refer to Ryanfire technical department for detailed and specific fire performance information.

RYANFIRE PASSIVE FIRE PROTECTION

RYANFIRE Technical Support:
info@ryanfire.co.nz - Tel 09 443 0362

Drawing Title

Ryanfire SL Collar to HVAC bundle 200mm AFS Logicwall

Scale	Date
NTS	**July 2024**

Drawing Number	Rev
V14.21	**2.0**

All errors and omissions excepted. The information contained within this drawing is believed to be correct on the date of publication, and is based upon tested and certified solutions. The policy of **Ryanfire Products** is one of constant improvement. Installers must ensure that they are following the latest published drawings, test evidence and instructions. Whilst **Ryanfire Products** will endeavour to keep its publications up to date, the accuracy of the information contained within this drawing may be affected by pertinent changes in the law or regulatory requirements and alterations or amendments to the specification of **the manufactured** products. Terms and conditions of sale apply.

Ryanfire Products owns and has copyright to these drawings. They are to be used only for the purpose for which they were intended and supplied and are not to be sold, transferred or made available for use by a third party. Any misuse of these drawings will result in legal proceedings.

INSTALLATION INSTRUCTIONS

1. ENSURE THE APERTURE IS CLEAN AND FREE OF DUST AND DEBRIS.
2. APPLY RYANFIRE MASTIC INTO THE ANNULAR GAP BETWEEN THE HVAC BUNDLE AND THE CLT WALL.
3. SELECT THE CORRECT SIZE RYANFIRE SL COLLAR TO FIT AROUND THE SERVICES.
4. SECURE THE SL COLLAR AROUND THE BUNDLE AND SLIDE IT UP UNTIL IT IS UP AGAINST THE SURFACE OF THE WALL. FIX THE COLLAR INTO PLACE WITH 10G X 50MM TIMBER SCREWS. ENSURE ALL FIXING TABS ARE USED.
5. APPLY RYANFIRE HP-X INTO THE ANNULAR GAP BETWEEN THE BUNDLE AND THE COLLAR TO THE FULL DEPTH OF THE COLLAR.
6. REPEAT THIS PROCESS ON THE OPPOSITE SIDE OF THE WALL.

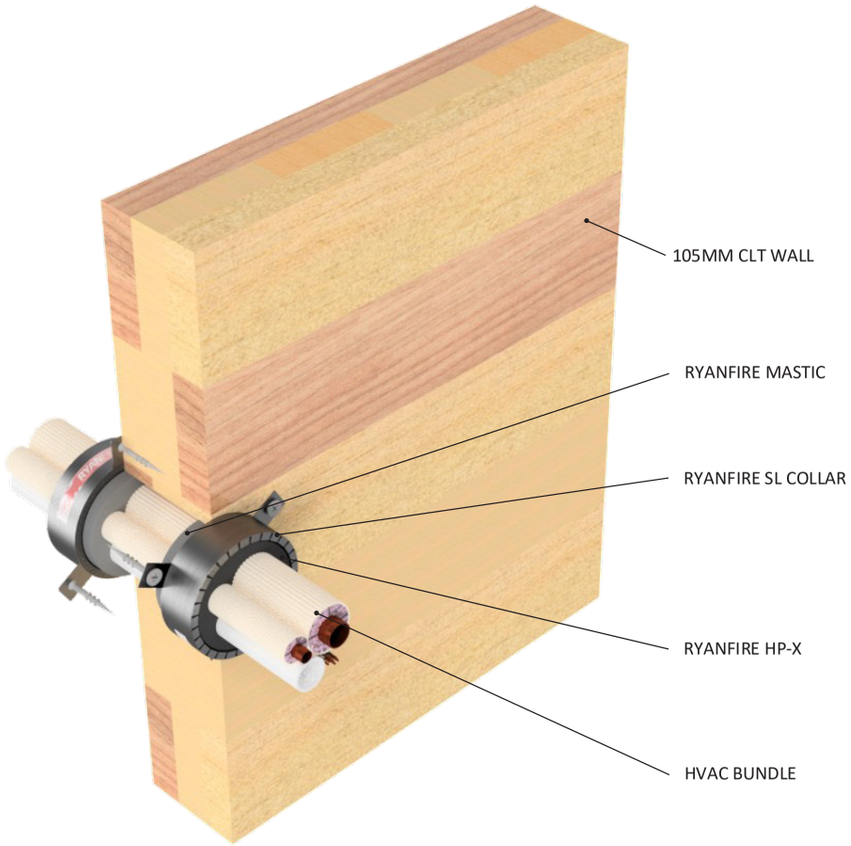

Products:	**RYANFIRE SL COLLAR** **RYANFIRE MASTIC** **RYANFIRE HP-X**
Approvals:	**AS 1530.4/AS 4072.1**
BK:	**270**
Ref:	**24SFR00007**
ID:	**F**
Scenario:	Penetration seal to HVAC bundle (heat pump services)
Services:	1 set pair coil copper pipes 5 TPS cables Ø20mm PVC pipe
Construction:	105mm Cross Laminated Timber (CLT) wall
Fire Integrity:	60 minutes
Fire Insulation	45 minutes

Web based drawings are for example only. Fire performance of any system is dependant on, but not limited to size of opening, substrate, if penetrations are passing through, type, size and number. Please refer to Ryanfire technical department for detailed and specific fire performance information.

RYANFIRE PASSIVE FIRE PROTECTION

RYANFIRE Technical Support:
info@ryanfire.co.nz - Tel 09 443 0362

Drawing Title

Ryanfire SL Collar to HVAC bundle 105mm CLT wall

Scale	Date
NTS	**July 2024**

Drawing Number	Rev
V14.22	**2.0**

All errors and omissions excepted. The information contained within this drawing is believed to be correct on the date of publication, and is based upon tested and certified solutions. The policy of **Ryanfire Products** is one of constant improvement. Installers must ensure that they are following the latest published drawings, test evidence and instructions. Whilst **Ryanfire Products** will endeavour to keep its publications up to date, the accuracy of the information contained within this drawing may be affected by pertinent changes in the law or regulatory requirements and alterations or amendments to the specification of **the manufactured** products. Terms and conditions of sale apply.

Ryanfire Products owns and has copyright to these drawings. They are to be used only for the purpose for which they were intended and supplied and are not to be sold, transferred or made available for use by a third party. Any misuse of these drawings will result in legal proceedings.

INSTALLATION INSTRUCTIONS

1. ENSURE THE APERTURE IS CLEAN AND FREE OF DUST AND DEBRIS.
2. INSTALL THE RYANFIRE SUPERSLEEVE TO FIT CENTRALLY WITHIN THE PLANE OF THE WALL, AROUND THE SERVICES.
3. APPLY A NOMINAL 10MM CONE OF RYANFIRE MASTIC TO THE JUNCTION BETWEEN THE SUPERSLEEVE AND THE PLASTERBOARD WALL.
4. CUT 2 LAYERS OF FOAM PLUG TO FIT TIGHTLY AROUND THE PAIR COIL BUNDLE AND INSERT THEM INTO THE SUPERLSEEVE ON ONE SIDE OF THE SLEEVE.

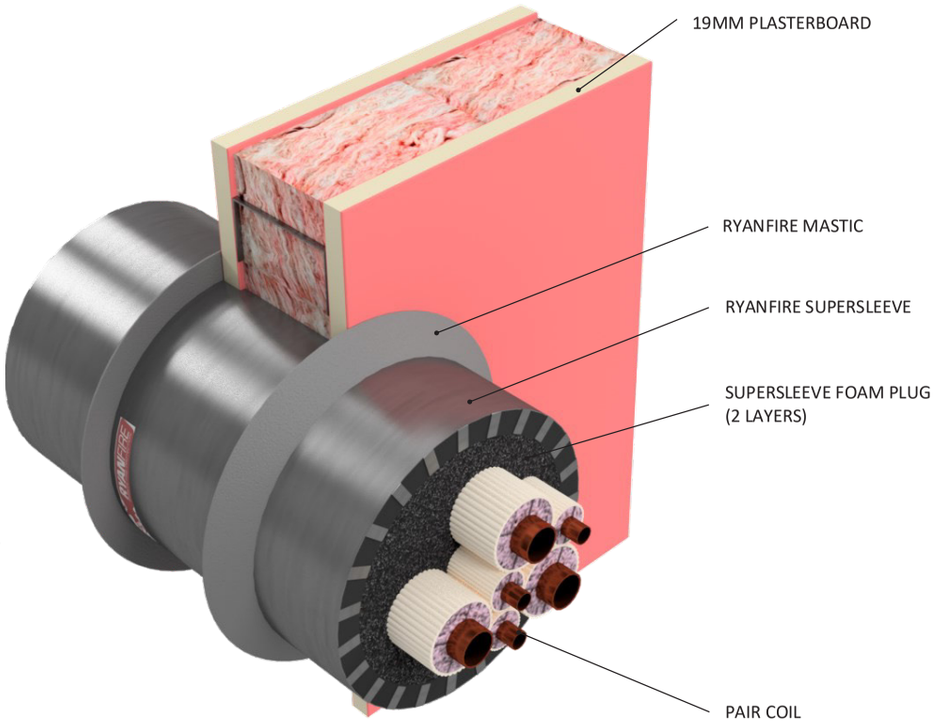

Products:	**RYANFIRE SUPERSLEEVE** **RYANFIRE MASTIC**
Approvals:	**AS 1530.4/AS 4072.1**
BK:	**264**
Ref:	**23SFR00094**
ID:	**D**
Scenario:	Penetration seal to HVAC pair coils (heat pump services)
Services:	Up to 3 sets pair coil copper pipes
Construction:	102mm FR plasterboard / Masonry wall
Annular:	0-1mm
Fire Integrity:	90 minutes
Fire Insulation:	45 minutes

Web based drawings are for example only. Fire performance of any system is dependant on, but not limited to size of opening, substrate, if penetrations are passing through, type, size and number. Please refer to Ryanfire technical department for detailed and specific fire performance information.

RYANFIRE PASSIVE FIRE PROTECTION

RYANFIRE Technical Support:
info@ryanfire.co.nz - Tel 09 443 0362

Drawing Title

Ryanfire SuperSleeve to pair coils 102mm plasterboard wall

Scale	Date
NTS	**July 2024**

Drawing Number	Rev
V14.23	**2.0**

All errors and omissions excepted. The information contained within this drawing is believed to be correct on the date of publication, and is based upon tested and certified solutions. The policy of **Ryanfire Products** is one of constant improvement. Installers must ensure that they are following the latest published drawings, test evidence and instructions. Whilst **Ryanfire Products** will endeavour to keep its publications up to date, the accuracy of the information contained within this drawing may be affected by pertinent changes in the law or regulatory requirements and alterations or amendments to the specification of **the manufactured** products. Terms and conditions of sale apply.

Ryanfire Products owns and has copyright to these drawings. They are to be used only for the purpose for which they were intended and supplied and are not to be sold, transferred or made available for use by a third party. Any misuse of these drawings will result in legal proceedings.

INSTALLATION INSTRUCTIONS

1. ENSURE THE APERTURE IS CLEAN AND FREE OF DUST AND DEBRIS.
2. INSTALL THE RYANFIRE SUPERSLEEVE TO FIT CENTRALLY WITHIN THE PLANE OF THE WALL, AROUND THE SERVICES.
3. APPLY A NOMINAL 10MM CONE OF RYANFIRE MASTIC TO THE JUNCTION BETWEEN THE SUPERSLEEVE AND THE PLASTERBOARD WALL.
4. CUT 2 LAYERS OF FOAM PLUG TO FIT TIGHTLY AROUND THE MIXED BUNDLE AND INSERT THEM INTO THE SUPERLSEEVE ON ONE SIDE OF THE SLEEVE.

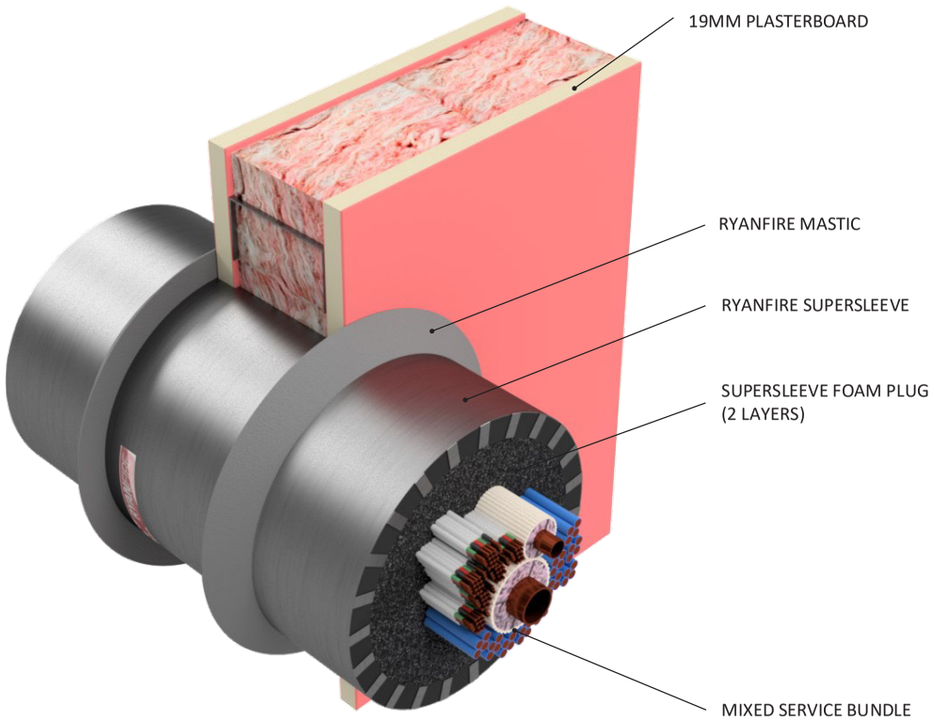

Products:	**RYANFIRE SUPERSLEEVE** **RYANFIRE MASTIC**
Approvals:	**AS 1530.4/AS 4072.1**
BK:	**264**
Ref:	**23SFR00094**
ID:	**E**
Scenario:	Penetration seal to mixed services, HVAC (heat pump) & cables
Services:	Up to Ø100mm mixed bundle : TPS, Data 1 set pair coil copper pipes
Construction:	102mm FR plasterboard / Masonry wall
Annular:	0-1mm
Fire Integrity:	120 minutes
Fire Insulation:	60 minutes

Web based drawings are for example only. Fire performance of any system is dependant on, but not limited to size of opening, substrate, if penetrations are passing through, type, size and number. Please refer to Ryanfire technical department for detailed and specific fire performance information.

RYANFIRE PASSIVE FIRE PROTECTION

RYANFIRE Technical Support:
info@ryanfire.co.nz - Tel 09 443 0362

Drawing Title

SuperSleeve to mixed services 102mm plasterboard wall

Scale	Date
NTS	**July 2024**

Drawing Number	Rev
V14.24	**2.0**

All errors and omissions excepted. The information contained within this drawing is believed to be correct on the date of publication, and is based upon tested and certified solutions. The policy of **Ryanfire Products** is one of constant improvement. Installers must ensure that they are following the latest published drawings, test evidence and instructions. Whilst **Ryanfire Products** will endeavour to keep its publications up to date, the accuracy of the information contained within this drawing may be affected by pertinent changes in the law or regulatory requirements and alterations or amendments to the specification of **the manufactured** products. Terms and conditions of sale apply.

Ryanfire Products owns and has copyright to these drawings. They are to be used only for the purpose for which they were intended and supplied and are not to be sold, transferred or made available for use by a third party. Any misuse of these drawings will result in legal proceedings.

INSTALLATION INSTRUCTIONS

1. ENSURE THE APERTURE IS CLEAN AND FREE OF DUST AND DEBRIS.
2. APPLY RYANFIRE MASTIC TO SMOKE SEAL THE GAP BETWEEN THE HVAC BUNDLE AND THE PLASTERBOARD.
3. SELECT THE CORRECT SIZE RYANFIRE SL COLLAR TO FIT AROUND THE HVAC BUNDLE.
4. POSITION THE RYANFIRE SL COLLAR AROUND THE HVAC BUNDLE AND SLIDE IT UP TO THE SURFACE OF THE PLASTERBOARD.
5. FIX THE SL COLLAR TO THE PLASTERBOARD WITH 40MM HOLLOW WALL ANCHORS. ENSUE ALL FIXING POINTS ARE USED.
6. APPLY RYANFIRE HP-X INTO THE ANNUALR GAP BETWEEN THE HVAC BUNDLE AND THE COLLAR TO THE FULL DEPTH OF COLLAR.
7. APPLY A BEAD OF RYANFIRE MASTIC TO SEAL THE GAP BETWEEN THE BUNDLE AND THE FLOOR BOARD.
8. CLEAN ANY EXCESS SEALANT USING A DAMP CLOTH.

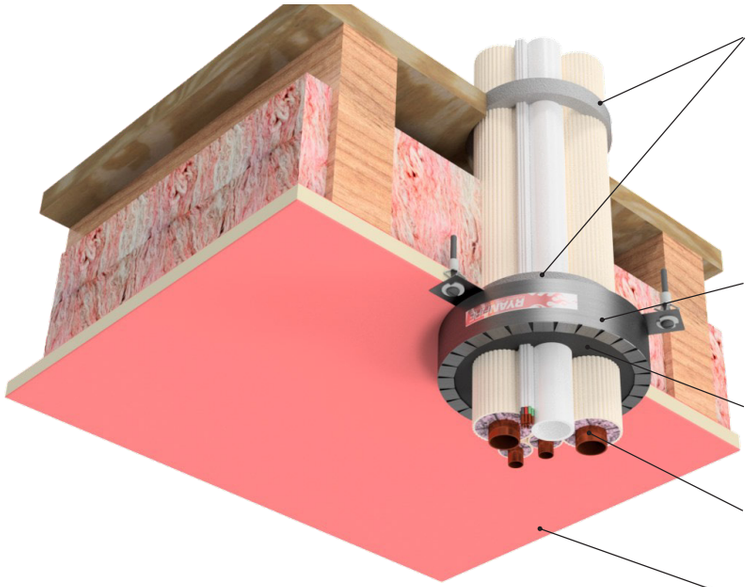

Products:	**RYANFIRE SL COLLAR** **RYANFIRE HP-X** **RYANFIRE MASTIC**
Approvals:	**AS 1530.4/AS 4072.1**
BK:	**64 / 105**
Ref:	**FRT 190272 / 21SFR00057**
ID:	**J / B**
Scenario:	Penetration seal to HVAC bundle (heat pump services)
Services:	Up to: 2 set pair coil copper pipes 5 TPS cables Ø20mm uPVC pipe
Construction:	16mm thick FR plasterboard ceiling
Aperture:	Ø100mm max
Fire Integrity:	60 minutes
Fire Insulation:	30 minutes

**** Note : Up to 3 sets pair coil, 3 TPS cables, 25mm PVC pipe achieves -/30/30***

Web based drawings are for example only. Fire performance of any system is dependant on, but not limited to size of opening, substrate, if penetrations are passing through, type, size and number. Please refer to Ryanfire technical department for detailed and specific fire performance information.

RYANFIRE PASSIVE FIRE PROTECTION

Client

Job Title

Drawing Title

SL Collar to HVAC bundle 16mm FR plasterboard ceiling

Scale	Date
NTS	**July 2024**
Sheet Size **A3**	Drawn By
Drawing Number **V17.9**	Rev **4.0**

Please note:
Ryanfire Products owns and has copyright in these drawings. They are to be used only for the purpose for which they were intended and supplied and are not to be sold, transferred or made available for use by a third party.

Any misuse of these drawings will result in legal proceedings.

All errors and omissions excepted - the Information contained within this drawing is believed to be correct on the date of publication, and is based upon tested and certified solutions. The policy of **RyanFire Products** is one of constant improvement. Installers must therefore ensure that they are following the latest published drawings, test evidence and instructions. Whilst **RyanFire Products** will endeavour to keep its publications up to date, the accuracy of the information contained within this drawing may be affected by pertinent changes in the law or regulatory requirements and alterations or amendments to the specification of **the manufactured** products. Terms and conditions of sale apply.

RYANFIRE Technical Support: info@ryanfire.co.nz - Tel 09 443 0362

INSTALLATION INSTRUCTIONS

1. ENSURE THE APERTURE IS CLEAN AND FREE OF DUST AND DEBRIS.
2. SELECT THE RYANFIRE TD80 COLLAR.
3. POSITION THE TD80 COLLAR AROUND THE HVAC BUNDLE AND SLIDE IT INTO THE APERTURE UNTIL THE FIXING TABS ARE FLUSH WITH THE TOP OF THE COMPOSITE FLOOR.
4. SECURE TD80 COLLAR USING 32MM MASONRY SCREWS THROUGH ALL FIXING TABS.
5. APPLY RYANFIRE MASTIC TO SMOKE SEAL BETWEEN THE COMPOSITE FLOOR AND THE TD COLLAR FROM ABOVE.
6. APPLY RYANFIRE HP-X INTO THE ANNULAR GAP BETWEEN THE HVAC BUNDLE AND THE TD COLLAR.

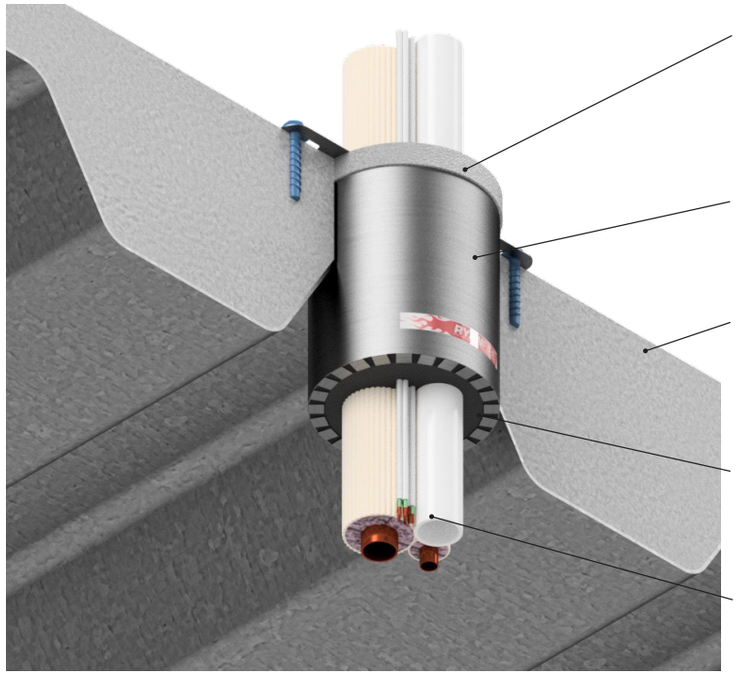

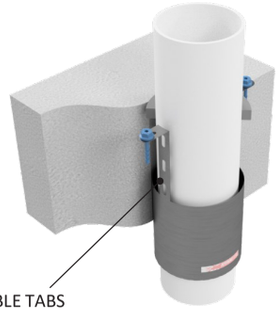

On the underside of the substrate, the TD Collar may be exposed no more than 80mm, or be recessed no more than 10mm.

TD COLLAR SIZE	CORE HOLE DIAMETER
TD 80	Ø105-Ø112mm

Products:	**RYANFIRE TD COLLAR** **RYANFIRE MASTIC** **RYANFIRE HP-X**
Approvals:	**AS 1530.4/AS 4072.1**
BK:	**60**
Ref:	**PF 19011**
ID:	**1**
Scenario:	Penetration seal to HVAC bundle (heat pump services)
Services:	Up to: 1 set pair coil copper pipes 6 TPS cables Ø25mm uPVC pipe
Construction:	130mm Composite floor (65mm thick at thinnest point)
Fire Integrity:	60 minutes
Fire Insulation:	60 minutes

Web based drawings are for example only. Fire performance of any system is dependant on, but not limited to size of opening, substrate, if penetrations are passing through, type, size and number. Please refer to Ryanfire technical department for detailed and specific fire performance information.

RYANFIRE PASSIVE FIRE PROTECTION

RYANFIRE Technical Support:
info@ryanfire.co.nz - Tel 09 443 0362

Drawing Title

TD collar to HVAC bundle 130mm composite floor

Scale	Date
NTS	**July 2024**

Drawing Number	Rev
V17.10	**7.0**

All errors and omissions excepted. The information contained within this drawing is believed to be correct on the date of publication, and is based upon tested and certified solutions. The policy of **Ryanfire Products** is one of constant improvement. Installers must ensure that they are following the latest published drawings, test evidence and instructions. Whilst **Ryanfire Products** will endeavour to keep its publications up to date, the accuracy of the information contained within this drawing may be affected by pertinent changes in the law or regulatory requirements and alterations or amendments to the specification of **the manufactured** products. Terms and conditions of sale apply.

Ryanfire Products owns and has copyright to these drawings. They are to be used only for the purpose for which they were intended and supplied and are not to be sold, transferred or made available for use by a third party. Any misuse of these drawings will result in legal proceedings.

INSTALLATION INSTRUCTIONS

1. ENSURE THE APERTURE IS CLEAN AND FREE OF DEBRIS AND LOOSE CEMENT. REMOVE ALL DUST FROM SURFACES REQUIRING INSTALLATION.
2. SELECT THE TD100 COLLAR. SMALLER DIAMETER TD COLLARS MAY BE USED ON REDUCED SERVICE PENETRATIONS THROUGH THE APERTURE.
3. SECURE THE TD COLLAR AROUND THE HVAC SERVICES BUNDLE AND SLIDE IT INTO THE APERTURE. ENSURE FIXING TABS ARE FLUSH WITH THE TOP OF THE CONCRETE FLOOR.
4. SECURE THE TD COLLAR IN POSITION USING 32MM MASONRY SCREWS THROUGH ALL FIXING TABS.
5. APPLY RYANFIRE MASTIC TO SMOKE SEAL BETWEEN THE CONCRETE FLOOR AND THE TD COLLAR FROM ABOVE.
6. APPLY RYANFIRE HP-X INTO THE GAP BETWEEN THE COLLAR AND THE MIXED SERVICES.
7. REMOVE ANY EXCESS HP-X WITH A DAMP CLOTH

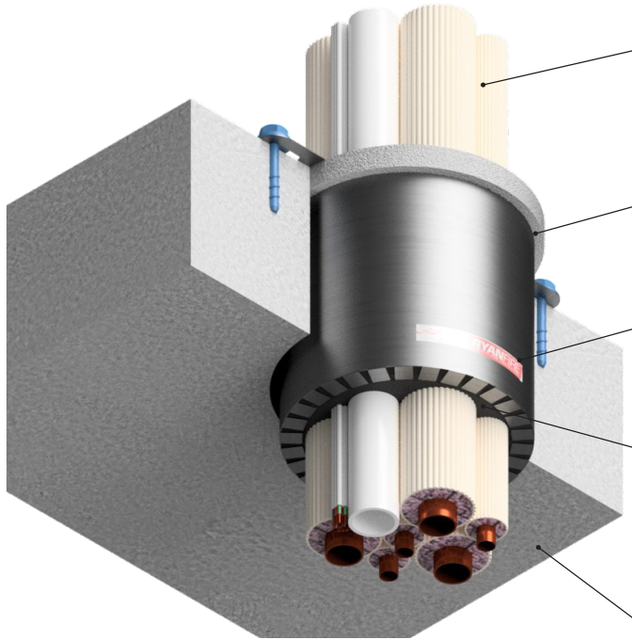

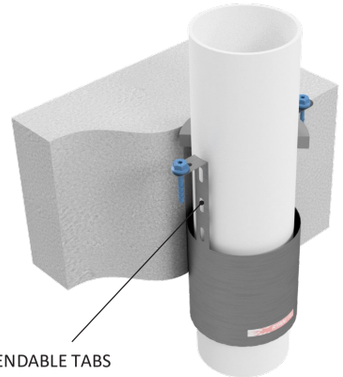

On the underside of the substrate, the TD Collar may be exposed no more than 80mm, or be recessed no more than 10mm.

TD COLLAR SIZE	CORE HOLE DIAMETER
TD 40	Ø72mm
TD 50	Ø82mm
TD 65	Ø102mm
TD 80	Ø112mm
TD 100	Ø142mm

Products:	**RYANFIRE TD COLLAR** **RYANFIRE HP-X** **RYANFIRE MASTIC**
Approvals:	**AS 1530.4/AS 4072.1**
BK:	**67**
Ref:	**FRT 190287**
ID:	**I**
Scenario:	Penetration seal to HVAC bundle (heat pump services)
Services:	Up to: 3 sets pair coil copper pipes 6 TPS cables Ø25mm uPVC pipe
Construction:	100mm thick concrete floor
Fire Integrity:	120 minutes
Fire Insulation:	60 minutes

Web based drawings are for example only. Fire performance of any system is dependant on, but not limited to size of opening, substrate, if penetrations are passing through, type, size and number. Please refer to Ryanfire technical department for detailed and specific fire performance information.

RYANFIRE PASSIVE FIRE PROTECTION

RYANFIRE Technical Support:
info@ryanfire.co.nz - Tel 09 443 0362

Drawing Title
TD Collar to HVAC bundle 100mm concrete floor

Scale	Date
NTS	**July 2024**

Drawing Number	Rev
V17.11	**9.0**

All errors and omissions excepted. The information contained within this drawing is believed to be correct on the date of publication, and is based upon tested and certified solutions. The policy of **Ryanfire Products** is one of constant improvement. Installers must ensure that they are following the latest published drawings, test evidence and instructions. Whilst **Ryanfire Products** will endeavour to keep its publications up to date, the accuracy of the information contained within this drawing may be affected by pertinent changes in the law or regulatory requirements and alterations or amendments to the specification of **the manufactured** products. Terms and conditions of sale apply.

Ryanfire Products owns and has copyright to these drawings. They are to be used only for the purpose for which they were intended and supplied and are not to be sold, transferred or made available for use by a third party. Any misuse of these drawings will result in legal proceedings.

INSTALLATION INSTRUCTIONS

1. ENSURE THE APERTURE IS CLEAN AND FREE OF DEBRIS.
2. CUT THE RYANFIRE STRAP TO ALLOW 2 REVOLUTIONS AROUND THE HVAC BUNDLE.
3. WRAP THE BUNDLE WITH THE RYANFIRE STRAP AT THE SAME LEVEL WHERE THE BUNDLE WILL PASS THROUGH THE RYANBATT 502.
4. INSTALL 35MM X 35MM X 200MM STEEL ANGLES ONTO THE JOISTS MID WAY ALONG THE LENGTH AND MID WAY ALONG THE WIDTH OF THE RYANBATT 502.
5. COAT THE TIMBER FLOOR JOISTS AND STEEL ANGLES WITH RYANFIRE MASTIC BRUSH GRADE.
6. INSTALL THE RYANBATT 502 BETWEEN THE TIMBER FLOOR JOISTS, RESTING ON TOP OF THE STEEL ANGLES.
7. ENSURE THE RYANBATT IS CUT TO FIT TIGHT AROUND THE HVAC BUNDLE AND RYANFIRE STRAP
8. APPLY RYANFIRE HP-X INTO ANY GAPS BETWEEN THE HVAC BUNDLE AND THE RYANFIRE STRAP.
9. ANY FULL BOARD TO BOARD JOINTS MUST BE JOINED WITH A 25MM X 25MM SHIPLAP JOINT.
10. ENSURE ALL RYANBATT JOINTS ARE SEALED USING RYANFIRE MASTIC BRUSH GRADE.
11. REMOVE EXCESS MASTIC USING A DAMP CLOTH.

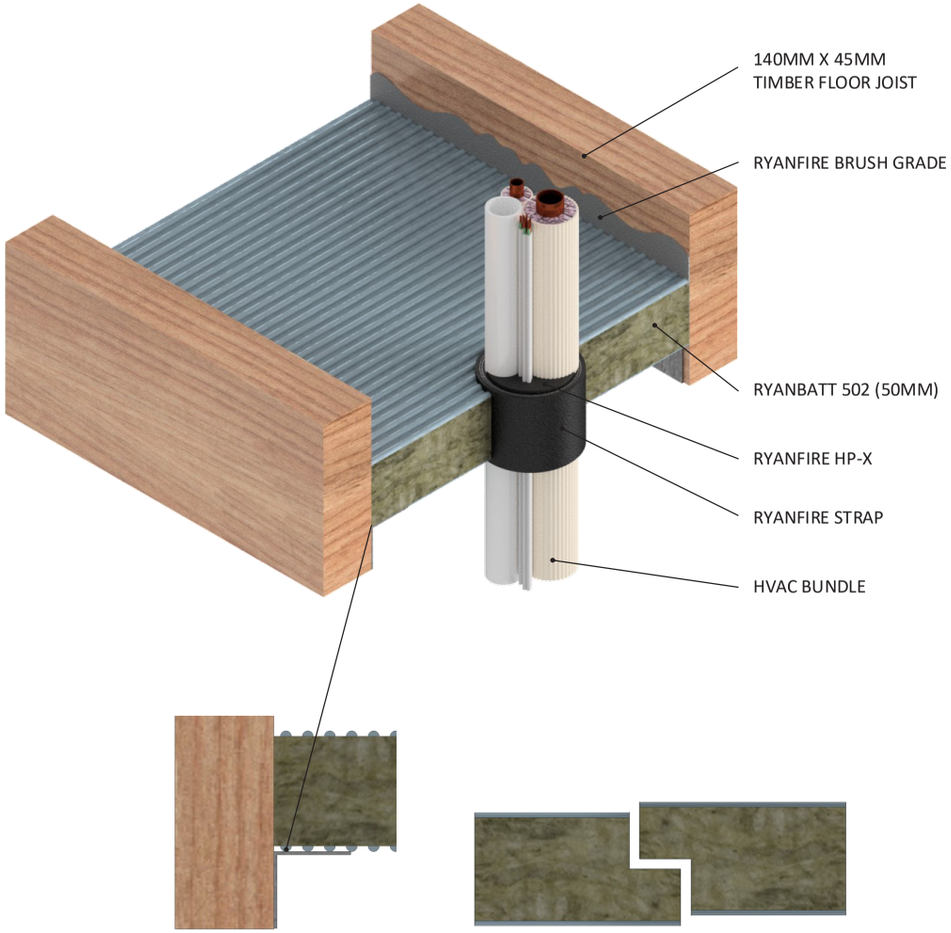

35MM X 35MM STEEL ANGLE

25MM X 25MM SHIPLAP JOINT

Products:	**RYANBATT 502** **RYANFIRE STRAP** **RYANFIRE HP-X** **RYANFIRE MASTIC**
Approvals:	**AS 1530.4/AS 4072.1**
BK:	**70**
Ref:	**PF 19047**
ID:	**E**
Scenario:	HVAC bundle (heat pump services) through Ryanfire Naked Floor System
Services:	Up to: 1 set pair coil copper pipes 3 TPS cables Ø25mm uPVC pipe
Construction:	140 x 45mm unlined timber framed ceiling
Fire Integrity:	60 minutes
Fire Insulation:	0 minutes

Web based drawings are for example only. Fire performance of any system is dependant on, but not limited to, size of opening, substrate, if penetrations are passing through, type, size and number. Please refer to Ryanfire technical department for detailed and specific fire performance information.

RYANFIRE PASSIVE FIRE PROTECTION

Client

Job Title

Drawing Title

Ryanfire Naked Floor System HVAC bundle

Scale	Date
NTS	**July 2024**
Sheet Size **A3**	Drawn By
Drawing Number **V17.12**	Rev **6.0**

Please note:
Ryanfire Products owns and has copyright in these drawings. They are to be used only for the purpose for which they were intended and supplied and are not to be sold, transferred or made available for use by a third party.

Any misuse of these drawings will result in legal proceedings.

All errors and omissions excepted - the Information contained within this drawing is believed to be correct on the date of publication, and is based upon tested and certified solutions. The policy of **RyanFire Products** is one of constant improvement. Installers must therefore ensure that they are following the latest published drawings, test evidence and instructions. Whilst **RyanFire Products** will endeavour to keep its publications up to date, the accuracy of the information contained within this drawing may be affected by pertinent changes in the law or regulatory requirements and alterations or amendments to the specification of **the manufactured** products. Terms and conditions of sale apply.

RYANFIRE Technical Support: info@ryanfire.co.nz - Tel 09 443 0362

INSTALLATION INSTRUCTIONS

1. ENSURE THE APERTURE IS CLEAN AND FREE OF ANY LOOSE CEMENT, DUST AND DEBRIS.
2. APPLY RYANFIRE MASTIC INTO THE ANNULAR GAPS AROUND THE SERVICES TO SMOKE SEAL THE APERTURE.
3. SELECT THE CORRECT SIZE SL COLLAR TO FIT AROUND THE HVAC SERVICES BUNDLE.
4. FIT THE SL COLLAR AROUND THE BUNDLE AND SLIDE IT UP UNTIL IT IS FLUSH WITH THE BOTTOM OF THE FLOOR.
5. SECURE THE SL COLLAR TO THE CONCRETE FLOOR WITH 32MM CONCRETE ANCHOR BOLTS. ENSURE ALL FIXING POINTS ARE USED.
6. APPLY RYANFIRE HP-X INTO THE GAP BETWEEN THE COLLAR AND THE MIXED SERVICES TO THE FULL DEPTH OF THE COLLAR (30MM).
7. REMOVE ANY EXCESS HP-X WITH A DAMP CLOTH.

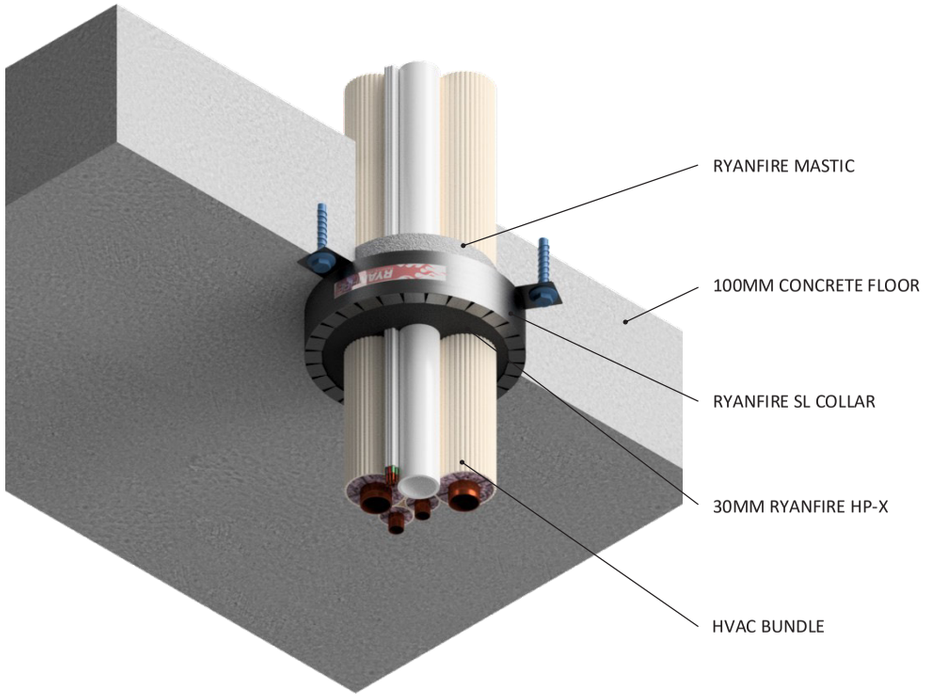

Products:	**RYANFIRE SL COLLAR** **RYANFIRE MASTIC** **RYANFIRE HP-X**
Approvals:	**AS 1530.4/AS 4072.1**
BK:	**72**
Ref:	**FRT 190285**
ID:	**A**
Scenario:	Penetration seal to HVAC bundle (heat pump services)
Services:	Up to: 2 sets pair coil copper pipes 3 TPS cables Ø25mm uPVC pipe
Construction:	100mm concrete floor
Fire Integrity:	120 minutes
Fire Insulation:	90 minutes

Web based drawings are for example only. Fire performance of any system is dependant on, but not limited to, size of opening, substrate, if penetrations are passing through, type, size and number. Please refer to Ryanfire technical department for detailed and specific fire performance information.

RYANFIRE PASSIVE FIRE PROTECTION

Client

Job Title

Drawing Title

SL Collar to HVAC bundle 100mm concrete floor

Scale	Date
NTS	**July 2024**
Sheet Size **A3**	Drawn By
Drawing Number **V17.13**	Rev **4.0**

Please note:
Ryanfire Products owns and has copyright in these drawings. They are to be used only for the purpose for which they were intended and supplied and are not to be sold, transferred or made available for use by a third party.

Any misuse of these drawings will result in legal proceedings.

All errors and omissions excepted - the Information contained within this drawing is believed to be correct on the date of publication, and is based upon tested and certified solutions. The policy of **RyanFire Products** is one of constant improvement. Installers must therefore ensure that they are following the latest published drawings, test evidence and instructions. Whilst **RyanFire Products** will endeavour to keep its publications up to date, the accuracy of the information contained within this drawing may be affected by pertinent changes in the law or regulatory requirements and alterations or amendments to the specification of **the manufactured** products. Terms and conditions of sale apply.

RYANFIRE Technical Support: info@ryanfire.co.nz - Tel 09 443 0362

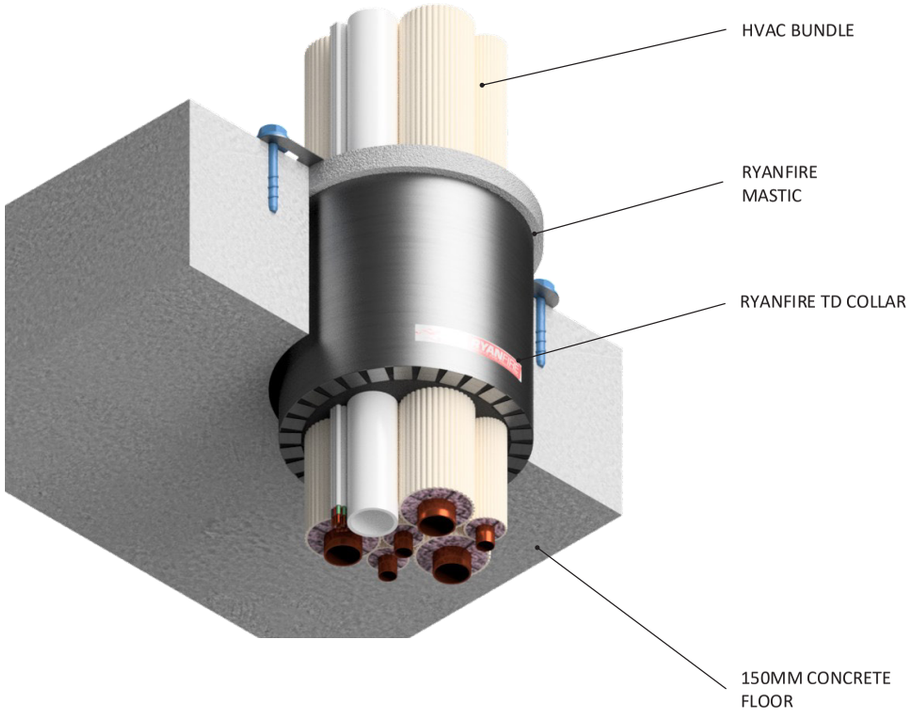

INSTALLATION INSTRUCTIONS

1. ENSURE THE APERTURE IS CLEAN AND FREE OF DEBRIS AND LOOSE CEMENT. REMOVE ALL DUST FROM SURFACES REQUIRING INSTALLATION.
2. SELECT THE TD100 COLLAR. SMALLER DIAMETER TD COLLARS MAY BE USED ON REDUCED SERVICE PENETRATIONS THROUGH THE APERTURE.
3. SECURE THE TD COLLAR AROUND THE HVAC SERVICES BUNDLE AND SLIDE IT INTO THE APERTURE. ENSURE FIXING TABS ARE FLUSH WITH THE TOP OF THE CONCRETE FLOOR.
4. SECURE THE TD COLLAR IN POSITION USING 32MM MASONRY SCREWS THROUGH ALL FIXING TABS.
5. APPLY RYANFIRE MASTIC TO SMOKE SEAL BETWEEN THE CONCRETE FLOOR AND THE TD COLLAR FROM ABOVE.

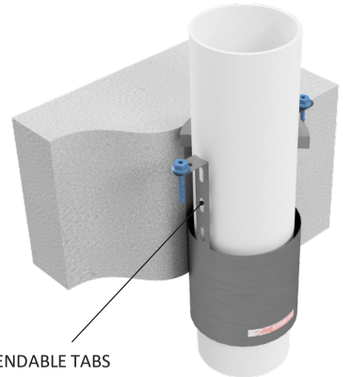

On the underside of the substrate, the TD Collar may be exposed no more than 80mm, or be recessed no more than 10mm.

TD COLLAR SIZE	CORE HOLE DIAMETER
TD 40	Ø72mm
TD 50	Ø82mm
TD 65	Ø102mm
TD 80	Ø112mm
TD 100	Ø142mm

Products:	**RYANFIRE TD COLLAR** **RYANFIRE MASTIC**
Approvals:	**AS 1530.4/AS 4072.1**
BK:	**79**
Ref:	**FRT 200018**
ID:	**G**
Scenario:	Penetration seal to HVAC bundle (heat pump services)
Services:	Up to: 3 sets pair coil copper pipes 6 TPS cables Ø25mm uPVC pipe
Construction:	150mm thick concrete floor
Fire Integrity:	120 minutes
Fire Insulation:	0 minutes

Web based drawings are for example only. Fire performance of any system is dependant on, but not limited to size of opening, substrate, if penetrations are passing through, type, size and number. Please refer to Ryanfire technical department for detailed and specific fire performance information.

RYANFIRE PASSIVE FIRE PROTECTION

RYANFIRE Technical Support:
info@ryanfire.co.nz - Tel 09 443 0362

Drawing Title
TD Collar to HVAC bundle 150mm concrete floor

Scale	Date
NTS	**July 2024**

Drawing Number	Rev
V17.14	**7.0**

All errors and omissions excepted. The information contained within this drawing is believed to be correct on the date of publication, and is based upon tested and certified solutions. The policy of **Ryanfire Products** is one of constant improvement. Installers must ensure that they are following the latest published drawings, test evidence and instructions. Whilst **Ryanfire Products** will endeavour to keep its publications up to date, the accuracy of the information contained within this drawing may be affected by pertinent changes in the law or regulatory requirements and alterations or amendments to the specification of **the manufactured** products. Terms and conditions of sale apply.

Ryanfire Products owns and has copyright to these drawings. They are to be used only for the purpose for which they were intended and supplied and are not to be sold, transferred or made available for use by a third party. Any misuse of these drawings will result in legal proceedings.

INSTALLATION INSTRUCTIONS

1. ENSURE THE APERTURE IS CLEAN AND FREE OF ANY DUST AND DEBRIS.
2. APPLY RYANFIRE HP-X TO A DEPTH OF 20MM INTO THE ANNULAR GAP. ENSURE THE GAP IS COMPLETELY FILLED.
3. SELECT THE CORRECT SIZE RYANFIRE SL COLLAR TO FIT AROUND THE HVAC SERVICES BUNDLE.
4. FIT THE SL COLLAR AROUND THE BUNDLE AND SLIDE IT UP UNTIL IT IS FLUSH TO THE BOTTOM SURFACE OF THE FLOOR.
5. SECURE THE SL COLLAR TO THE FLOOR WITH 75MM TIMBER SCREWS. ENSURE ALL FIXING POINTS ARE USED.
6. APPLY RYANFIRE HP-X INTO THE GAP BETWEEN THE COLLAR AND THE MIXED SERVICES TO THE FULL DEPTH OF THE SL COLLAR (30MM).
7. REMOVE ANY EXCESS HP-X WITH A DAMP CLOTH.

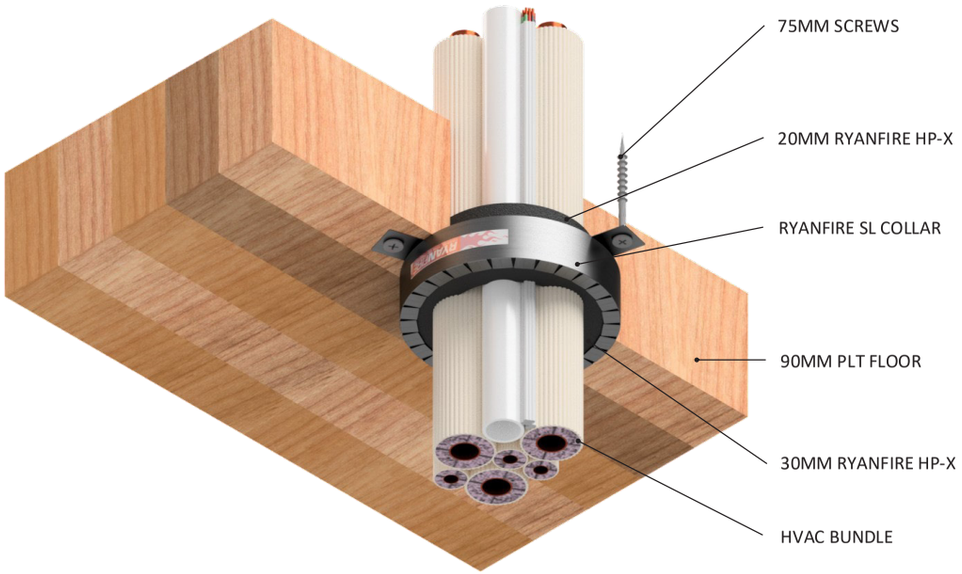

Products:	**RYANFIRE SL COLLAR** **RYANFIRE HP-X**
Approval:	**AS 1530.4/4072.1**
BK:	**87**
Ref:	**PF 20061**
ID:	**S**
Scenario:	Penetration seal to HVAC bundle (heat pump services)
Services:	Up to: 3 sets pair coil copper pipes 5 TPS cables Ø25mm uPVC pipe
Annular:	0-20mm
Construction:	90mm PLT floor
Fire Integrity:	60 minutes
Fire Insulation:	30 minutes

Web based drawings are for example only. Fire performance of any system is dependant on, but not limited to size of opening, substrate, if penetrations are passing through, type, size and number. Please refer to Ryanfire technical department for detailed and specific fire performance information.

RYANFIRE PASSIVE FIRE PROTECTION

Client

Job Title

Drawing Title

SL Collar to HVAC bundle
Parallel Laminated Timber floor

Scale	Date
NTS	**July 2024**
Sheet Size	Drawn By
A3	

Drawing Number	Rev
V17.15	**3.0**

Please note:
Ryanfire Products owns and has copyright in these drawings. They are to be used only for the purpose for which they were intended and supplied and are not to be sold, transferred or made available for use by a third party.

Any misuse of these drawings will result in legal proceedings.

All errors and omissions excepted - the Information contained within this drawing is believed to be correct on the date of publication, and is based upon tested and certified solutions. The policy of **RyanFire Products** is one of constant improvement. Installers must therefore ensure that they are following the latest published drawings, test evidence and instructions. Whilst **RyanFire Products** will endeavour to keep its publications up to date, the accuracy of the information contained within this drawing may be affected by pertinent changes in the law or regulatory requirements and alterations or amendments to the specification of **the manufactured** products. Terms and conditions of sale apply.

RYANFIRE Technical Support: info@ryanfire.co.nz - Tel 09 443 0362

INSTALLATION INSTRUCTIONS

1. ENSURE THE APERTURE IS CLEAN AND FREE OF ANY DUST AND DEBRIS.
2. APPLY RYANFIRE MASTIC INTO THE ANNULAR GAP AROUND THE BUNDLE ON THE TOP SIDE OF THE FLOOR TO SMOKE SEAL THE APERTURE.
3. SELECT THE CORRECT SIZE RYANFIRE SL COLLAR TO FIT AROUND THE HVAC BUNDLE.
4. POSITION THE RYANFIRE SL COLLAR AROUND THE SERVICES AND SLIDE IT UP UNTIL IT IS FLUSH WITH THE BOTTOM OF THE FLOOR.
5. FIX THE COLLAR TO THE FLOOR USING 50MM M6 ANCHOR BOLTS AND PENNY WASHERS . ENSURE ALL FIXING POINTS ARE USED AND THE ANCHOR BOLTS ACHIEVE A MINIMUM OF 25MM EMBEDMENT INTO THE CONCRETE.
6. APPLY RYANFIRE HP-X INTO THE ANNULAR GAP BETWEEN THE SL COLLAR AND THE BUNDLE OF SERVICES TO THE FULL DEPTH OF THE COLLAR.

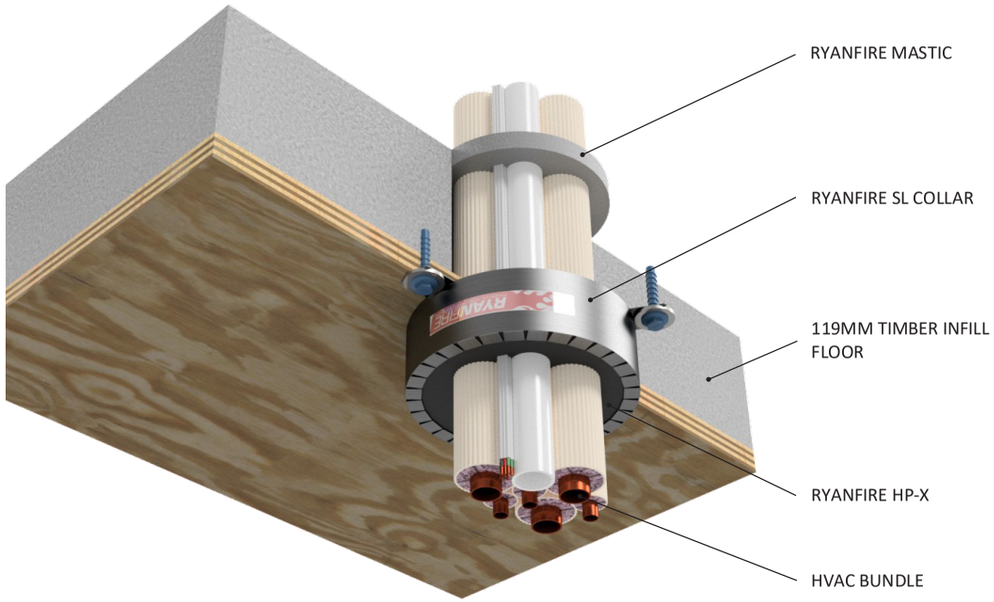

Products:	**RYANFIRE SL COLLAR** **RYANFIRE HP-X** **RYANFIRE MASTIC**
Approval:	**AS 1530.4/4072.1**
BK:	**104**
Ref:	**21SFR00059**
ID:	**K, L**
Scenario:	Penetration seal to HVAC bundle (heat pump services)
Services:	Up to: 3 sets pair coil copper pipes 5 TPS cables Ø20mm uPVC pipe
Annular:	0-20mm
Construction:	Rib & Timber Infill floor (100mm concrete + 19mm ply)
Fire Integrity:	90 minutes
Fire Insulation:	30 minutes*

** -/90/60 FRR for 1 set pair coil, 5 TPS, Ø20mm PVC*

Web based drawings are for example only. Fire performance of any system is dependant on, but not limited to size of opening, substrate, if penetrations are passing through, type, size and number. Please refer to Ryanfire technical department for detailed and specific fire performance information.

RYANFIRE PASSIVE FIRE PROTECTION

Client

Job Title

Drawing Title

SL Collar to HVAC bundle
119mm Rib & Timber Infill floor

Scale	Date
NTS	**July 2024**
Sheet Size **A3**	Drawn By
Drawing Number **V17.16**	Rev **2.0**

Please note:
Ryanfire Products owns and has copyright in these drawings. They are to be used only for the purpose for which they were intended and supplied and are not to be sold, transferred or made available for use by a third party.

Any misuse of these drawings will result in legal proceedings.

All errors and omissions excepted - the Information contained within this drawing is believed to be correct on the date of publication, and is based upon tested and certified solutions. The policy of **RyanFire Products** is one of constant improvement. Installers must therefore ensure that they are following the latest published drawings, test evidence and instructions. Whilst **RyanFire Products** will endeavour to keep its publications up to date, the accuracy of the information contained within this drawing may be affected by pertinent changes in the law or regulatory requirements and alterations or amendments to the specification of **the manufactured** products. Terms and conditions of sale apply.

RYANFIRE Technical Support: info@ryanfire.co.nz - Tel 09 443 0362

INSTALLATION INSTRUCTIONS

1. ENSURE THE APERTURE IS CLEAN AND FREE OF DUST AND DEBRIS.
2. CUT THE RYANBATT 502 BOARDS TO FIT TIGHTLY INTO THE APERTURE.
3. CUT THE RYANBATTS TO ALLOW A 20-25MM ANNULAR GAP AROUND THE HVAC BUNDLE.
4. CUT THE RYANBATTS ACROSS THE SHORTEST DIMENSION INCORPORATING THE MIDPOINT OF THE PENETRATION TO ENABLE THE BOARD TO BE FITTED INTO THE APERTURE.
5. APPLY RYANFIRE BRUSH GRADE MASTIC TO ALL THE INTERNAL EDGES OF THE APERTURE AND TO ALL THE CUT AND EXPOSED EDGES OF THE RYANBATTS EXCEPT THE AREA AROUND THE SERVICE PENETRATION.
6. INSERT THE FIRST LAYER OF RYANBATT INTO THE APERTURE, RECESSED 50MM FROM THE TOP OF THE FLOOR. APPLY A THICK BEAD OF RYANFIRE MASTIC TO THE PERIMETER, ON THE TOP FACE OF THE RYANBATT, THEN INSERT THE SECOND LAYER OF BOARD INTO THE APERTURE TO SIT FLUSH WITH THE TOP OF THE FLOOR.
7. APPLY RYANFIRE HP-X INTO THE ANNULAR GAP BETWEEN THE BUNDLE AND THE BOARDS TO THE FULL DEPTH OF BOTH BOARDS (100MM).
8. WRAP 1 LAYER OF 300MM WIDE RYANFIRE SERVOWRAP TIGHTLY AROUND THE BUNDLE WITH A 100MM OVERLAP, ON BOTH SIDES OF THE FLOOR. SLIDE THE SERVOWRAP UP AGAINST THE SURFACE OF THE BOARD.
9. SECURE THE SERVOWRAP WITH STEEL CABLE TIES, 50MM FROM EACH END AND 1 NOMINALLY IN THE CENTRE.
10. SEAL ANY EXPOSED EDGES OF THE SERVOWRAP WITH RYANFIRE FOIL TAPE.
11. APPLY A 50MM X 50MM RYANFIRE MASTIC CONE TO THE JOINT BETWEEN THE SERVOWRAP AND THE RYANBATT, ON BOTH SIDES OF THE FLOOR.
12. APPLY RYANFIRE MASTIC TO ANY OTHER GAPS AND JOINTS.
13. CLEAN UP ANY EXCESS SEALANT WITH A DAMP CLOTH.

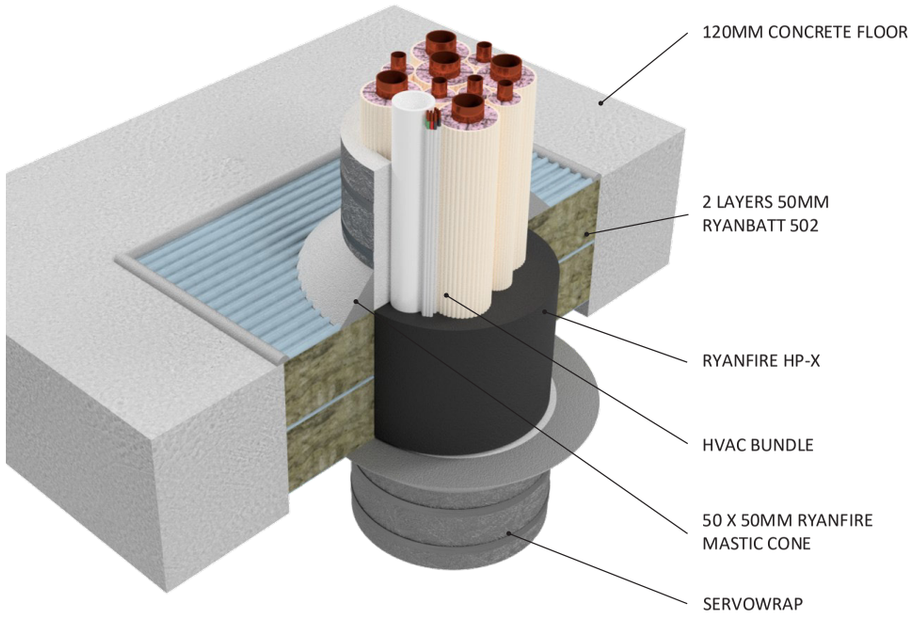

Products:	**RYANBATT 502** **RYANFIRE HP-X** **RYANFIRE SERVOWRAP** **RYANFIRE MASTIC** **RYANFIRE BRUSH GRADE MASTIC**
Approvals:	**AS 1530.4/AS 4072.1**
BK:	**113**
Ref:	**21SFR00063**
ID:	**F**
Scenario:	Penetration seal to HVAC bundle (heat pump services)
Services:	Up to: 5 sets pair coil copper pipes 3 TPS cables Ø20mm uPVC pipe
Annular:	20-25mm
Construction:	120mm Concrete floor
Fire Integrity:	90 minutes
Fire Insulation:	90 minutes

Web based drawings are for example only. Fire performance of any system is dependant on, but not limited to, size of opening, substrate, if penetrations are passing through, type, size and number. Please refer to Ryanfire technical department for detailed and specific fire performance information.

RYANFIRE PASSIVE FIRE PROTECTION

Client

Job Title

Drawing Title

Ryanbatt 502, HP-X & Servowrap to HVAC bundle

Scale	Date
NTS	**July 2024**
Sheet Size **A3**	Drawn By
Drawing Number **V17.18**	Rev **3.0**

Please note:
Ryanfire Products owns and has copyright in these drawings. They are to be used only for the purpose for which they were intended and supplied and are not to be sold, transferred or made available for use by a third party.

Any misuse of these drawings will result in legal proceedings.

All errors and omissions excepted - the Information contained within this drawing is believed to be correct on the date of publication, and is based upon tested and certified solutions. The policy of **RyanFire Products** is one of constant improvement. Installers must therefore ensure that they are following the latest published drawings, test evidence and instructions. Whilst **RyanFire Products** will endeavour to keep its publications up to date, the accuracy of the information contained within this drawing may be affected by pertinent changes in the law or regulatory requirements and alterations or amendments to the specification of **the manufactured** products. Terms and conditions of sale apply.

RYANFIRE Technical Support: info@ryanfire.co.nz - Tel 09 443 0362

INSTALLATION INSTRUCTIONS

1. ENSURE THE APERTURE IS CLEAN AND FREE OF ANY LOOSE CEMENT, DUST AND DEBRIS.
2. APPLY RYANFIRE MASTIC INTO THE ANNULAR GAP BETWEEN THE BUNDLE AND THE FLOOR.
3. SELECT THE RYANFIRE SL 65 COLLAR TO FIT AROUND THE BUNDLE.
4. POSITION THE RYANFIRE SL COLLAR AROUND THE BUNDLE AND SLIDE IT UP UNTIL IT IS FLUSH WITH THE BOTTOM OF THE FLOOR.
5. FIX THE COLLAR TO THE FLOOR USING 50MM M6 CONCRETE ANCHORS. ENSURE ALL FIXING POINTS ARE USED AND THE ANCHORS ACHIEVE A MINIMUM OF 25MM EMBEDMENT INTO THE CONCRETE.
6. APPLY RYANFIRE HP-X INTO THE GAP BETWEEN THE BUNDLE AND THE SL COLLAR TO THE FULL DEPTH OF THE COLLAR.
7. REMOVE ANY EXCESS HP-X WITH A DAMP CLOTH.

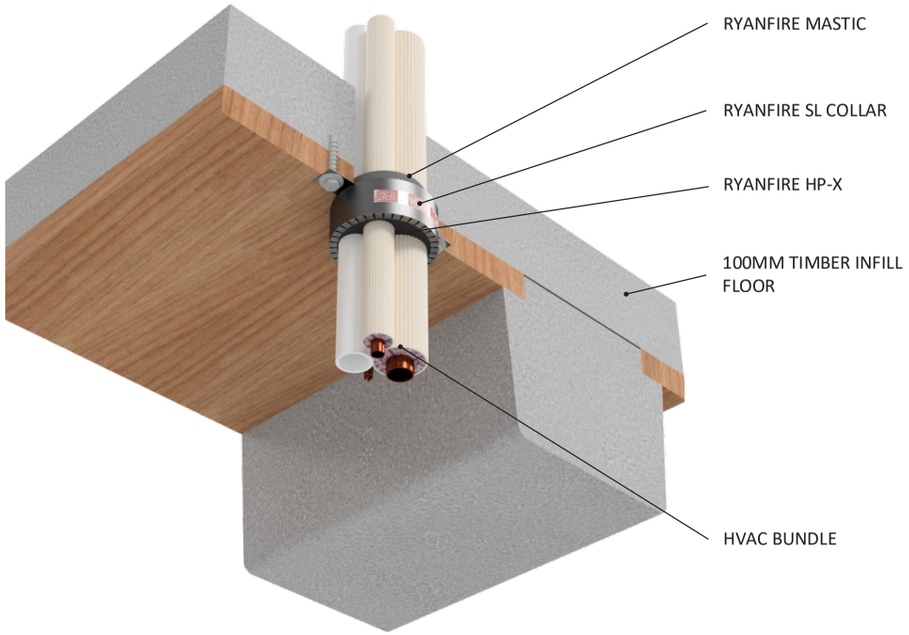

Products:	**RYANFIRE SL COLLAR** **RYANFIRE HP-X** **RYANFIRE MASTIC**
Approvals:	**AS 1530.4/AS 4072.1**
BK:	**129**
Ref:	**22SFR00014**
ID:	**A**
Scenario:	Penetration seal to HVAC bundle
Services:	1 set pair coil copper pipes 5 TPS cables Ø20mm uPVC conduit
Construction:	Rib & Timber Infill floor (75mm concrete + 25mm timber infill)
Fire Integrity:	60 minutes
Fire Insulation:	30 minutes

Web based drawings are for example only. Fire performance of any system is dependant on, but not limited to size of opening, substrate, if penetrations are passing through, type, size and number. Please refer to Ryanfire technical department for detailed and specific fire performance information.

RYANFIRE PASSIVE FIRE PROTECTION

Client

Job Title

Drawing Title

Ryanfire SL Collar to HVAC bundle
100mm Rib & Timber Infill floor

Scale	Date
NTS	**July 2024**
Sheet Size **A3**	Drawn By
Drawing Number **V17.19**	Rev **2.0**

Please note:
Ryanfire Products owns and has copyright in these drawings. They are to be used only for the purpose for which they were intended and supplied and are not to be sold, transferred or made available for use by a third party.

Any misuse of these drawings will result in legal proceedings.

All errors and omissions excepted - the information contained within this drawing is believed to be correct on the date of publication, and is based upon tested and certified solutions. The policy of **RyanFire Products** is one of constant improvement. Installers must therefore ensure that they are following the latest published drawings, test evidence and instructions. Whilst **RyanFire Products** will endeavour to keep its publications up to date, the accuracy of the information contained within this drawing may be affected by pertinent changes in the law or regulatory requirements and alterations or amendments to the specification of **the manufactured** products. Terms and conditions of sale apply.

RYANFIRE Technical Support: info@ryanfire.co.nz - Tel 09 443 0362

INSTALLATION INSTRUCTIONS

1. ENSURE THE APERTURE IS CLEAN AND FREE OF ANY DUST AND DEBRIS.
2. INSERT PEF BACKING ROD INTO THE ANNULAR GAP ON BOTH SIDES OF THE FLOOR.
3. APPLY RYANFIRE MASTIC TO THE DEPTH OF 10MM INTO THE ANNULAR GAP BETWEEN THE BUNDLE AND THE FLOOR ON THE TOP OF THE FLOOR.
4. APPLY RYANFIRE HP-X TO A DEPTH OF 20MM INTO THE ANNULAR GAP, AND IN BETWEEN THE BUNDLE, ON THE BOTTOM OF THE FLOOR. ENSURE THE GAP IS COMPLETELY FILLED.
5. SELECT THE CORRECT SIZE RYANFIRE SL COLLAR TO FIT AROUND THE BUNDLE.
6. FIT THE SL COLLAR AROUND THE BUNDLE AND SLIDE IT UP UNTIL IT IS FLUSH TO THE BOTTOM SURFACE OF THE FLOOR.
7. FIX THE COLLAR TO THE FLOOR WITH M6 X 80MM STEEL WASHER HEAD SCREWS. ENSURE ALL FIXING POINTS ARE USED.
8. APPLY RYANFIRE HP-X INTO THE GAP BETWEEN THE COLLAR AND THE HVAC BUNDLE TO THE FULL DEPTH OF THE SL COLLAR (30MM).
9. REMOVE ANY EXCESS SEALANT WITH A DAMP CLOTH.

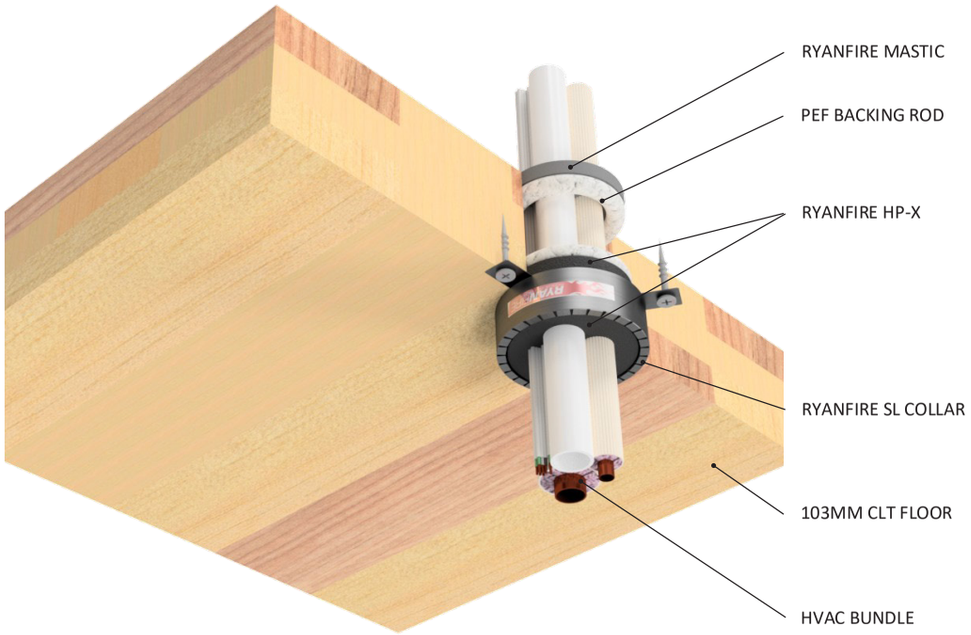

Products:	**RYANFIRE SL COLLAR** **RYANFIRE HP-X** **RYANFIRE MASTIC**
Approval:	**AS 1530.4/4072.1**
BK:	**234**
Ref:	**23SFR00075**
ID:	**D**
Scenario:	Penetration seal to HVAC bundle (heat pump services)
Services:	Up to : 1 set pair coil copper pipes 5 TPS cables Ø20mm PVC pipe
Annular:	3-17mm
Construction:	103mm Cross Laminated Timber (CLT) floor
Fire Integrity:	30 minutes
Fire Insulation:	30 minutes

Web based drawings are for example only. Fire performance of any system is dependant on, but not limited to size of opening, substrate, if penetrations are passing through, type, size and number. Please refer to Ryanfire technical department for detailed and specific fire performance information.

RYANFIRE PASSIVE FIRE PROTECTION

RYANFIRE Technical Support:
info@ryanfire.co.nz - Tel 09 443 0362

Drawing Title

Ryanfire SL Collar to HVAC bundle 103mm CLT floor

Scale	Date
NTS	**July 2024**

Drawing Number	Rev
V17.20	**2.0**

All errors and omissions excepted. The information contained within this drawing is believed to be correct on the date of publication, and is based upon tested and certified solutions. The policy of **Ryanfire Products** is one of constant improvement. Installers must ensure that they are following the latest published drawings, test evidence and instructions. Whilst **Ryanfire Products** will endeavour to keep its publications up to date, the accuracy of the information contained within this drawing may be affected by pertinent changes in the law or regulatory requirements and alterations or amendments to the specification of **the manufactured** products. Terms and conditions of sale apply.

Ryanfire Products owns and has copyright to these drawings. They are to be used only for the purpose for which they were intended and supplied and are not to be sold, transferred or made available for use by a third party. Any misuse of these drawings will result in legal proceedings.

INSTALLATION INSTRUCTIONS

1. ENSURE THE APERTURE IS CLEAN AND FREE OF DUST AND DEBRIS.
2. SELECT THE CORRECT SIZE RYANFIRE TD COLLAR TO FIT AROUND THE HVAC BUNDLE.
3. SECURE THE TD COLLAR AROUND THE SERVICES AND SLIDE IT INTO APERTURE. ENSURE THE FIXING TABS ARE FLUSH WITH THE TOP OF THE FLOOR.
4. SECURE THE TD COLLAR IN POSITION USING 6MM X 32MM MASONRY SCREWS. USE ALL FIXING TABS.
5. INSERT PEF BACKING ROD INTO THE ANNULAR GAPS BETWEEN THE HVAC BUNDLE AND THE TD COLLAR, RECESSED 10MM FROM THE SURFACE OF THE FLOOR.
6. APPLY A 10MM DEEP BEAD OF RYANSIL INTO THE ANNULAR GAPS BETWEEN THE COMPOSITE FLOOR, TD COLLAR, AND SERVICES. ENSURE THE ENTIRE APERTURE IS SEALED.
7. CLEAN ANY EXCESS SEALANT USING A DAMP CLOTH.

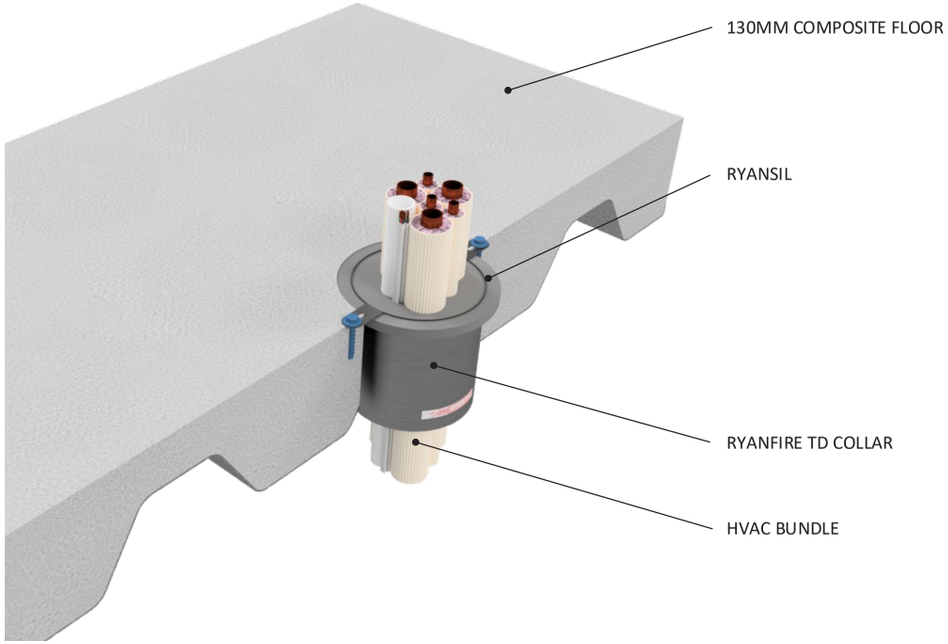

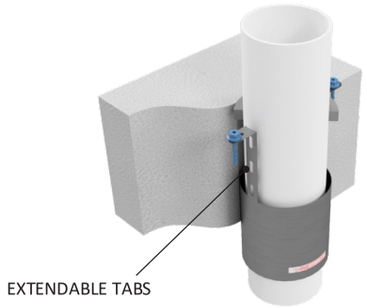

On the underside of the substrate, the TD Collar may be exposed no more than 80mm, or be recessed no more than 10mm.

TD COLLAR SIZE	CORE HOLE DIAMETER
TD 40	Ø65-Ø72mm
TD 50	Ø70-Ø82mm
TD 65	Ø90-Ø102mm
TD 80	Ø105-Ø112mm
TD 100	Ø140-Ø142mm
TD 125	Ø160-Ø162mm
TD 150	Ø205-Ø225mm

Products:	**RYANFIRE TD COLLAR** **RYANSIL**
Approvals:	**AS 1530.4/AS 4072.1**
BK:	**245**
Ref:	**23SFR00062**
ID:	**E, F**
Scenario:	Penetration seal to HVAC bundle (heat pump services)
Services:	Up to 3 sets pair coil copper pipes 5 TPS cables Ø20mm PVC pipe
Construction:	130mm Composite floor
Fire Resistance:	1 set pair coil bundle: -/90/30 3 sets pair coil bundle: -/90/90

Web based drawings are for example only. Fire performance of any system is dependant on, but not limited to, size of opening, substrate, if penetrations are passing through, type, size and number. Please refer to Ryanfire technical department for detailed and specific fire performance information.

RYANFIRE PASSIVE FIRE PROTECTION

RYANFIRE Technical Support:
info@ryanfire.co.nz - Tel 09 443 0362

Drawing Title

Ryanfire TD Collar to HVAC bundle 130mm composite floor

Scale	Date
NTS	**July 2024**

Drawing Number	Rev
V17.21	**2.0**

All errors and omissions excepted. The information contained within this drawing is believed to be correct on the date of publication, and is based upon tested and certified solutions. The policy of **Ryanfire Products** is one of constant improvement. Installers must ensure that they are following the latest published drawings, test evidence and instructions. Whilst **Ryanfire Products** will endeavour to keep its publications up to date, the accuracy of the information contained within this drawing may be affected by pertinent changes in the law or regulatory requirements and alterations or amendments to the specification of **the manufactured** products. Terms and conditions of sale apply.

Ryanfire Products owns and has copyright to these drawings. They are to be used only for the purpose for which they were intended and supplied and are not to be sold, transferred or made available for use by a third party. Any misuse of these drawings will result in legal proceedings.

INSTALLATION INSTRUCTIONS

1. ENSURE THE APERTURE IS CLEAN, FREE OF DUST AND DEBRIS.
2. CUT THE RYANBATT 502 TO THE CORRECT SIZE TO FILL THE TRAPEZOIDAL PROFILE. ENSURE THE RYANBATT EXTENDS 100MM EITHER SIDE OF THE CORED APERTURE.
3. APPLY RYANFIRE BRUSH GRADE MASTIC TO WHERE THE RYANBATT WILL MATE WITH THE SURFACE OF THE FLOOR, AND TO ALL CUT AND EXPOSED EDGES OF THE RYANBATT.
4. SECURE RYANBATT 502 INTO POSITION USING 75MM CONCRETE ANCHORS AND PENNY WASHERS 50MM FROM THE EDGE AND AT CENTRES NOT EXCEEDING 200MM.
5. SEAL ANY GAPS AND JOINTS WITH RYANFIRE BRUSH GRADE MASIC.
6. APPLY RYANFIRE MASTIC TO THE JUNCTION BETWEEN THE HVAC BUNDLE AND THE FLOOR / RYANBATT ON BOTH SIDES OF THE FLOOR.
7. FIT THE CORRECT SIZE SL COLLAR AROUND THE HVAC BUNDLE.
8. SLIDE THE COLLAR ALONG THE BUNDLE UNTIL IT IS HARD UP AGAINST THE UNDERSIDE OF THE FLOOR / RYANBATT 502.
9. FIX THE RYANFIRE SL COLLAR INTO POSITION USING A COMBINATION OF:
   A. MINIMUM 32MM CONCRETE ANCHORS AND PENNY WASHERS FOR THE FLOOR PROFILE PEAKS.
   B. MINIMUM 75MM CONCRETE ANCHORS AND PENNY WASHERS FOR THE FLOOR PROFILE TROUGHS.
10. FIXINGS MUST HAVE A MINIMUM 25MM EMBEDMENT INTO THE CONCRETE.
11. APPLY RYANFIRE HP-X INTO THE ANNULAR GAP BETWEEN THE COLLAR AND THE SERVICES, TO THE FULL DEPTH OF THE COLLAR.
12. APPLY A NOMINAL 5MM BEAD OF RYANFIRE MASTIC TO THE JUNCTION BETWEEN THE COLLAR AND THE FLOOR / RYANBATT.

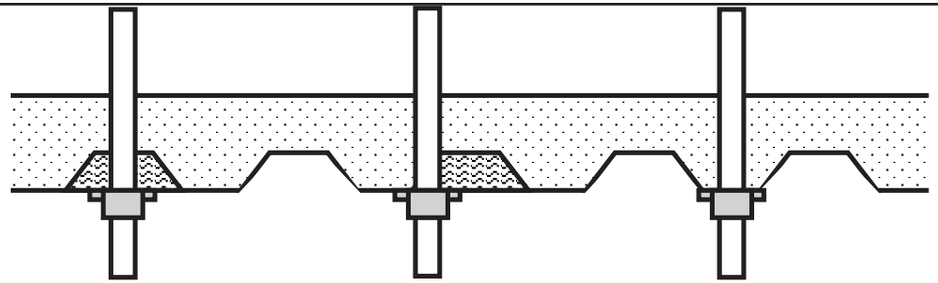

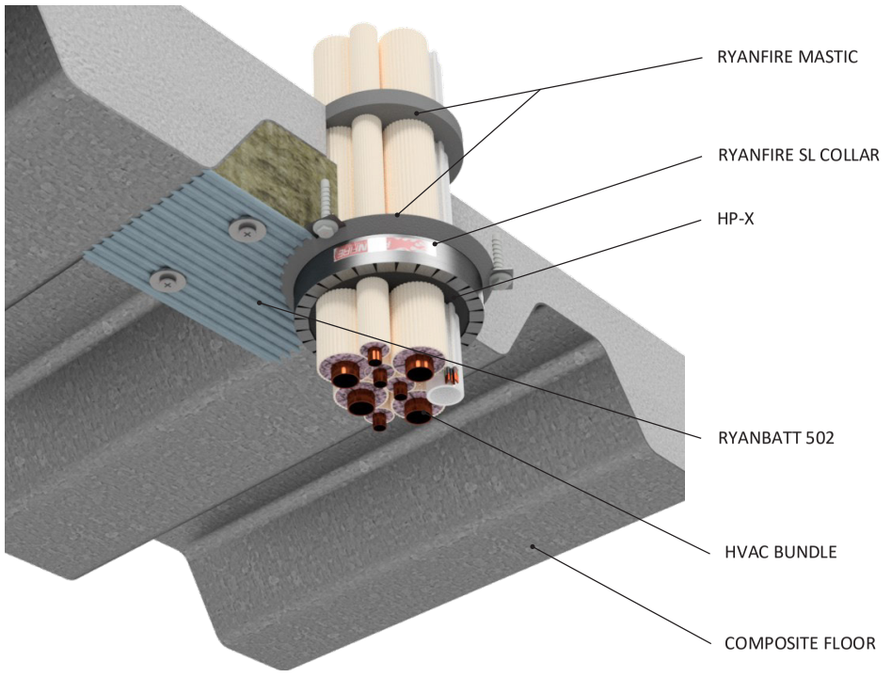

Products:	**RYANBATT 502** **RYANFIRE SL COLLAR** **RYANFIRE HP-X** **RYANFIRE MASTIC** **RYANFIRE BRUSH GRADE MASTIC**
Approvals:	**AS 1530.4/AS 4072.1**
BK:	**209**
Ref:	**23SFR00031**
ID:	**B, C**
Scenario:	Penetration seal to HVAC bundle (heat pump services)
Construction:	125mm composite floor
Services:	Up to: 4 sets pair coil copper pipes 5 TPS cables Ø20mm PVC pipe
Fire Resistance:	1 set pair coil bundle: -/90/45 4 sets pair coil bundle: -/90/60

Web based drawings are for example only. Fire performance of any system is dependant on, but not limited to size of opening, substrate, if penetrations are passing through, type, size and number. Please refer to Ryanfire technical department for detailed and specific fire performance information.

RYANFIRE PASSIVE FIRE PROTECTION

RYANFIRE Technical Support:
info@ryanfire.co.nz - Tel 09 443 0362

Drawing Title
SL Collar & HP-X to HVAC bundle 125mm composite floor

Scale	Date
NTS	**July 2024**

Drawing Number	Rev
V17.22	**2.0**

All errors and omissions excepted. The information contained within this drawing is believed to be correct on the date of publication, and is based upon tested and certified solutions. The policy of **Ryanfire Products** is one of constant improvement. Installers must ensure that they are following the latest published drawings, test evidence and instructions. Whilst **Ryanfire Products** will endeavour to keep its publications up to date, the accuracy of the information contained within this drawing may be affected by pertinent changes in the law or regulatory requirements and alterations or amendments to the specification of **the manufactured** products. Terms and conditions of sale apply.

Ryanfire Products owns and has copyright to these drawings. They are to be used only for the purpose for which they were intended and supplied and are not to be sold, transferred or made available for use by a third party. Any misuse of these drawings will result in legal proceedings.

INSTALLATION INSTRUCTIONS

1. ENSURE THE APERTURE IS CLEAN AND FREE OF DUST AND DEBRIS.
2. APPLY RYANFIRE HP-X INTO THE ANNULAR GAP BETWEEN THE BUNDLE AND THE FLOOR TO THE FULL DEPTH OF THE FLOOR.
3. WRAP 1 LAYER OF 300MM WIDE RYANFIRE SERVOWRAP TIGHTLY AROUND THE BUNDLE WITH A 100MM OVERLAP, ON THE TOP SIDE OF THE FLOOR.
4. SLIDE THE SERVOWRAP UP AGAINST THE SURFACE OF THE FLOOR. SECURE THE SERVOWRAP AROUND THE HVAC BUNDLE WITH STEEL CABLE TIES, 50MM FROM EACH END AND 1 NOMINALLY IN THE CENTRE.
5. SEAL ANY EXPOSED EDGES OF THE SERVOWRAP WITH RYANFIRE FOIL TAPE.
6. APPLY A 20MM X 20MM RYANFIRE MASTIC CONE TO THE JOINT BETWEEN THE SERVOWRAP AND THE FLOOR.
7. CLEAN UP ANY EXCESS SEALANT WITH A DAMP CLOTH.

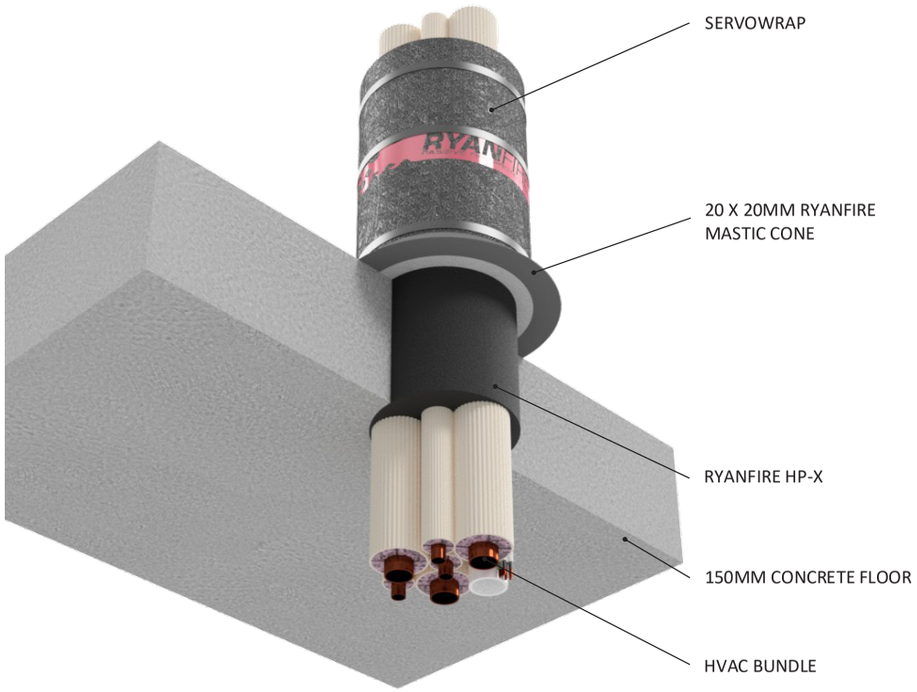

Products:	**RYANFIRE HP-X** **RYANFIRE MASTIC** **RYANFIRE SERVOWRAP**
Approvals:	**AS 1530.4/AS 4072.1**
BK:	**252**
Ref:	**23SFR00079**
ID:	**E, F**
Scenario:	Penetration seal to HVAC bundle (heat pump services)
Services:	Up to: 3 sets pair coil copper pipes 5 TPS cables Ø20mm uPVC pipe
Annular:	5-25mm
Construction:	150mm Concrete floor
Fire Integrity:	120 minutes
Fire Insulation:	120 minutes

*** Note : You may remove the Servowrap to achieve -/30/-**

Web based drawings are for example only. Fire performance of any system is dependant on, but not limited to, size of opening, substrate, if penetrations are passing through, type, size and number. Please refer to Ryanfire technical department for detailed and specific fire performance information.

RYANFIRE PASSIVE FIRE PROTECTION

RYANFIRE Technical Support:
info@ryanfire.co.nz - Tel 09 443 0362

Drawing Title

HP-X & Servowrap to HVAC bundle 150mm concrete floor

Scale	Date
NTS	**July 2024**

Drawing Number	Rev
V17.23	**2.0**

All errors and omissions excepted. The information contained within this drawing is believed to be correct on the date of publication, and is based upon tested and certified solutions. The policy of **Ryanfire Products** is one of constant improvement. Installers must ensure that they are following the latest published drawings, test evidence and instructions. Whilst **Ryanfire Products** will endeavour to keep its publications up to date, the accuracy of the information contained within this drawing may be affected by pertinent changes in the law or regulatory requirements and alterations or amendments to the specification of **the manufactured** products. Terms and conditions of sale apply.

Ryanfire Products owns and has copyright to these drawings. They are to be used only for the purpose for which they were intended and supplied and are not to be sold, transferred or made available for use by a third party. Any misuse of these drawings will result in legal proceedings.

INSTALLATION INSTRUCTIONS

1. ENSURE THE APERTURE IS CLEAN AND FREE OF DUST AND DEBRIS.
2. CUT THE RYANBATT 502 TO FIT TIGHTLY INTO THE APERTURE.
3. CUT THE RYANBATT TO ALLOW A 20-25MM ANNULAR GAP AROUND THE HVAC BUNDLE.
4. CUT THE RYANBATT ACROSS THE SHORTEST DIMENSION INCORPORATING THE MIDPOINT OF THE PENETRATION TO ENABLE THE BOARD TO BE FITTED INTO THE APERTURE.
5. APPLY RYANFIRE BRUSH GRADE MASTIC TO ALL THE INTERNAL EDGES OF THE APERTURE AND TO ALL THE CUT AND EXPOSED EDGES OF THE FIRST LAYER OF 502 BOARD EXCEPT THE AREA AROUND THE SERVICE PENETRATION.
6. INSERT THE FIRST LAYER OF RYANBATT INTO THE APERTURE, RECESSED 50MM FROM THE TOP OF THE FLOOR.
7. APPLY A THICK BEAD OF RYANFIRE MASTIC TO THE PERIMETER, ON THE TOP FACE OF THE RYANBATT.
8. APPLY RYANFIRE BRUSH GRADE MASTIC TO ALL CUT AND EXPOSED EDGES OF THE SECOND LAYER OF RYANBATT EXCEPT THE AREA AROUND THE SERVICE PENETRATION.
9. INSERT THE SECOND LAYER OF BOARD INTO THE APERTURE TO SIT FLUSH WITH THE TOP OF THE FLOOR.
10. APPLY RYANFIRE HP-X INTO THE ANNULAR GAP BETWEEN THE BUNDLE AND THE BOARDS TO THE FULL DEPTH OF BOTH BOARDS (100MM).
11. APPLY RYANFIRE MASTIC TO ANY OTHER GAPS AND JOINTS.
12. CLEAN UP ANY EXCESS SEALANT WITH A DAMP CLOTH.

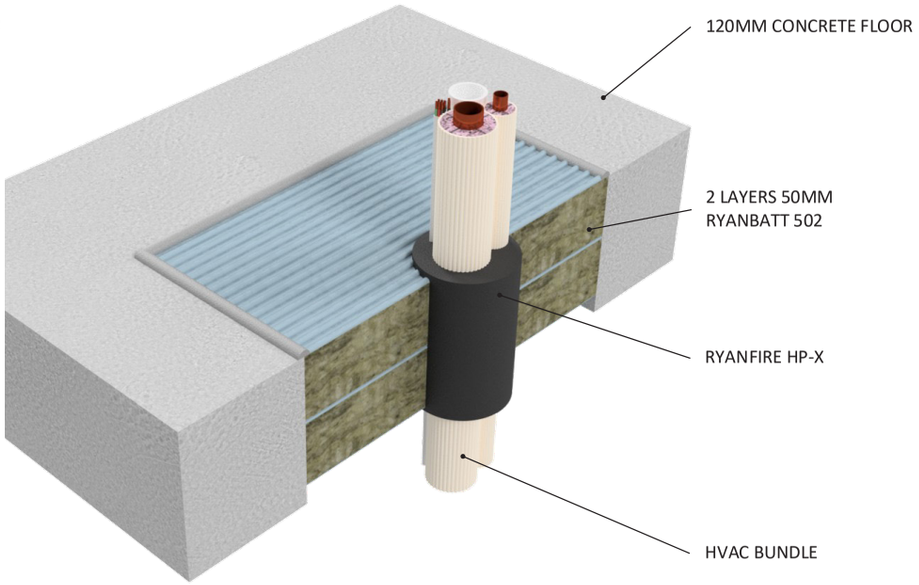

Products:	**RYANBATT 502** **RYANFIRE HP-X** **RYANFIRE MASTIC** **RYANFIRE BRUSH GRADE MASTIC**
Approvals:	**AS 1530.4/AS 4072.1**
BK:	**113**
Ref:	**21SFR00063**
ID:	**E**
Scenario:	Penetration seal to HVAC bundle (heat pump services)
Services:	1 set pair coil copper pipes 3 TPS cables Ø20mm uPVC pipe
Annular:	20-25mm
Construction:	120mm Concrete floor
Fire Integrity:	90 minutes
Fire Insulation:	90 minutes

Web based drawings are for example only. Fire performance of any system is dependant on, but not limited to, size of opening, substrate, if penetrations are passing through, type, size and number. Please refer to Ryanfire technical department for detailed and specific fire performance information.

RYANFIRE PASSIVE FIRE PROTECTION

Client

Job Title

Drawing Title

Ryanbatt 502 & HP-X to HVAC bundle 120mm concrete floor

Scale	Date
NTS	**July 2024**
Sheet Size **A3**	Drawn By
Drawing Number **V17.17**	Rev **3.0**

Please note:
Ryanfire Products owns and has copyright in these drawings. They are to be used only for the purpose for which they were intended and supplied and are not to be sold, transferred or made available for use by a third party.

Any misuse of these drawings will result in legal proceedings.

All errors and omissions excepted - the Information contained within this drawing is believed to be correct on the date of publication, and is based upon tested and certified solutions. The policy of **RyanFire Products** is one of constant improvement. Installers must therefore ensure that they are following the latest published drawings, test evidence and instructions. Whilst **RyanFire Products** will endeavour to keep its publications up to date, the accuracy of the information contained within this drawing may be affected by pertinent changes in the law or regulatory requirements and alterations or amendments to the specification of **the manufactured** products. Terms and conditions of sale apply.

RYANFIRE Technical Support: info@ryanfire.co.nz - Tel 09 443 0362

RYANFIRE
PASSIVE FIRE PROTECTION

Contact Us

AUCKLAND

11 Ashfield Road, Wairau Valley, Auckland 0627

P: +64 9 443 0362

CHRISTCHURCH

29 Lunns Road, Middleton 8024

P +64 3 348 9279

WELLINGTON

77/12 Mohuia Crescent, Elsdon, Porirua 5022

P: +64 4 237 0004

www.ryanfire.co.nz

E: info@ryanfire.co.nz

NEW ZEALAND MADE ®

FPA NEW ZEALAND FULL MEMBER 2023 – 2024

V1.0 082024 © RYANFIRE PRODUCTS